参考資料

COSEL

TEST DATA OF TUNS1200F48

Regulated DC Power Supply
July 20, 2020

Approved by : Junichi Hatagishi
Junichi Hatagishi Design Manager

Prepared by : Shunsuke Sawai
Shunsuke Sawai Design Engineer

COSEL CO.,LTD.

参考資料

COSEL

CONTENTS

1.Input Current (by Load Current) ・・・・・・・・・・・・・・・・・・・・・・・・ 1
2.Efficiency (by Load Current) ・・・・・・・・・・・・・・・・・・・・・・・・ 2
3.Power Factor (by Load Current) ・・・・・・・・・・・・・・・・・・・・・・・・ 3
4.Inrush Current ・・・・・・・・・・・・・・・・・・・・・・・・・・・・・・・・ 4
5.Leakage Current ・・・・・・・・・・・・・・・・・・・・・・・・・・・・・・・・ 5
6.Line Regulation ・・・・・・・・・・・・・・・・・・・・・・・・・・・・・・・・ 6
7.Load Regulation ・・・・・・・・・・・・・・・・・・・・・・・・・・・・・・・・ 7
8.Ripple-Noise ・・・・・・・・・・・・・・・・・・・・・・・・・・・・・・・・・ 7
9.Dynamic Load Response ・・・・・・・・・・・・・・・・・・・・・・・・・・・・ 8
10.Rise and Fall Time ・・・・・・・・・・・・・・・・・・・・・・・・・・・・・ 9
11.Hold-Up Time ・・・・・・・・・・・・・・・・・・・・・・・・・・・・・・・・ 10
12.Instantaneous Interruption Compensation ・・・・・・・・・・・・・・・・・・ 11
13.Overcurrent Protection ・・・・・・・・・・・・・・・・・・・・・・・・・・・ 12
14.Ambient Temperature Drift ・・・・・・・・・・・・・・・・・・・・・・・・・ 13
15.Minimum Input Voltage for Regulated Output Voltage ・・・・・・・・・・・・ 13
16.Overvoltage Protection ・・・・・・・・・・・・・・・・・・・・・・・・・・・ 13
17.Figure of Testing Circuitry ・・・・・・・・・・・・・・・・・・・・・・・・・ 14
(Final Page 15)

COSEL

Model	TUNS1200F48
Item	Input Current (by Load Current)
Object	――――――

Temperature 25°C
Testing Circuitry Figure A

1.Graph

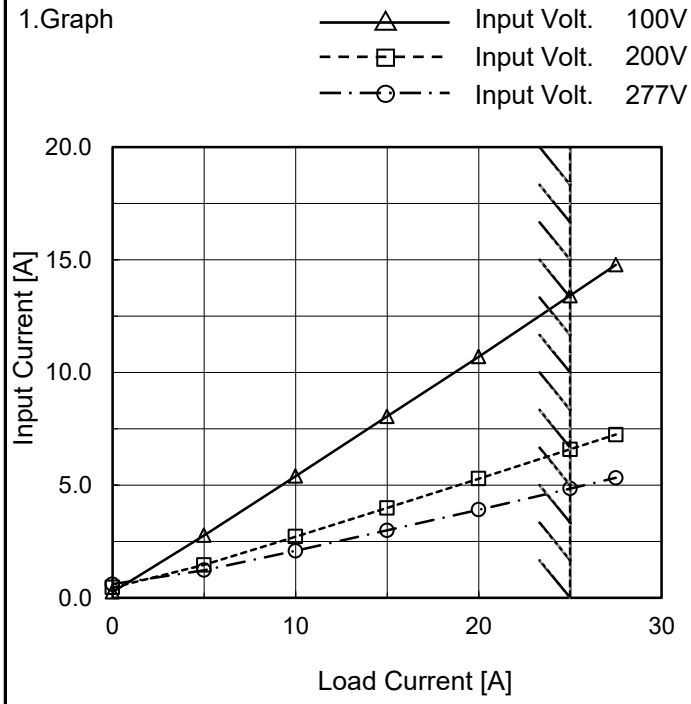

Note: Slanted line shows the range of the rated load current.

2.Values

Load Current [A]	Input Current [A]		
	Input Volt. 100[V]	Input Volt. 200[V]	Input Volt. 277[V]
0.0	0.255	0.453	0.606
5.0	2.770	1.456	1.221
10.0	5.400	2.713	2.084
15.0	8.050	3.990	2.989
20.0	10.700	5.290	3.910
25.0	13.410	6.590	4.850
27.5	14.780	7.240	5.320
--	-	-	-
--	-	-	-
--	-	-	-
--	-	-	-

BC-11520

COSEL

Model	TUNS1200F48
Item	Efficiency (by Load Current)
Object	――――――

Temperature 25°C
Testing Circuitry Figure A

1.Graph

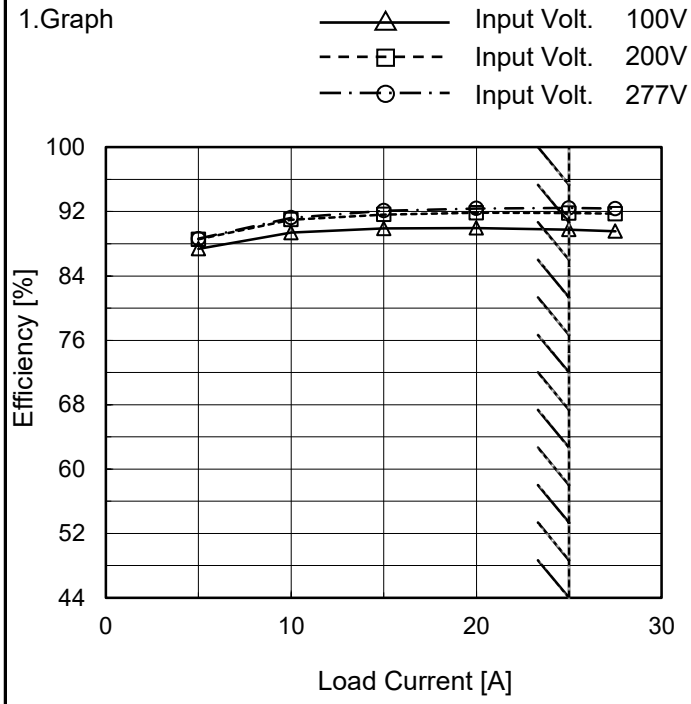

Note: Slanted line shows the range of the rated load current.

2.Values

Load Current [A]	Efficiency [%]		
	Input Volt. 100[V]	Input Volt. 200[V]	Input Volt. 277[V]
0.0	-	-	-
5.0	87.4	88.6	88.6
10.0	89.4	91.0	91.2
15.0	89.9	91.6	92.1
20.0	90.0	91.9	92.4
25.0	89.8	91.8	92.4
27.5	89.6	91.7	92.4
--	-	-	-
--	-	-	-
--	-	-	-
--	-	-	-

BC-11520

COSEL

Model	TUNS1200F48
Item	Power Factor (by Load Current)
Object	――――――――

Temperature 25°C
Testing Circuitry Figure A

1.Graph

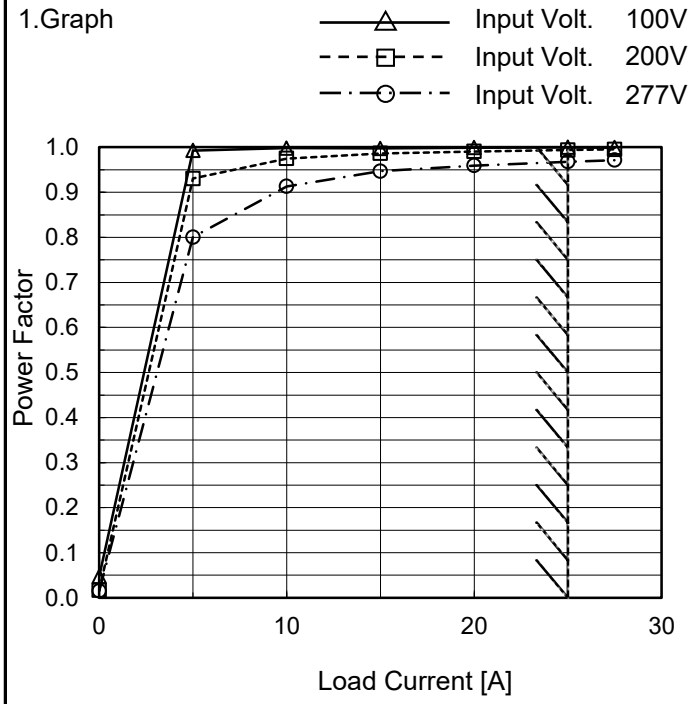

Note: Slanted line shows the range of the rated load current.

2.Values

Load Current [A]	Power Factor		
	Input Volt. 100[V]	Input Volt. 200[V]	Input Volt. 277[V]
0.0	0.047	0.017	0.015
5.0	0.993	0.931	0.800
10.0	0.998	0.975	0.913
15.0	0.998	0.986	0.947
20.0	0.999	0.991	0.959
25.0	0.999	0.994	0.968
27.5	0.999	0.995	0.971
--	-	-	-
--	-	-	-
--	-	-	-
--	-	-	-

COSEL

Model	TUNS1200F48	
Item	Inrush Current	Temperature 25°C Testing Circuitry Figure A
Object	――――――	

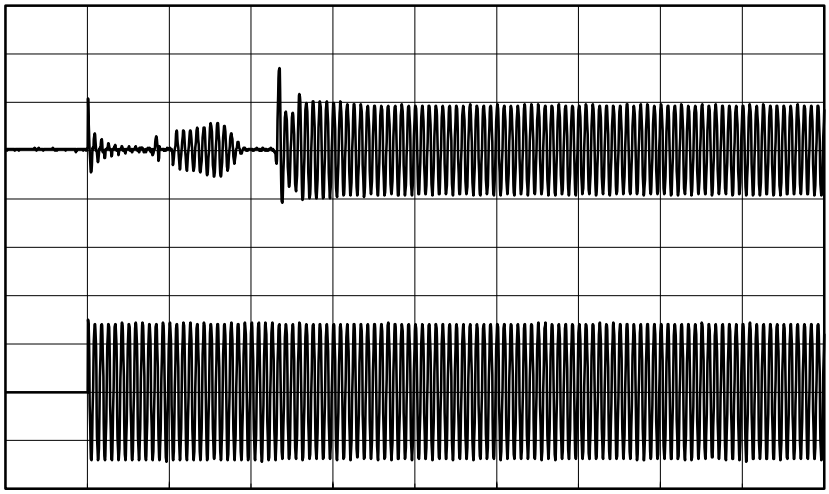

Input Voltage 100 V
Frequency 60 Hz
Load 100 %

Primary inrush current :
21.5 A
Secondary inrush current :
34.1 A

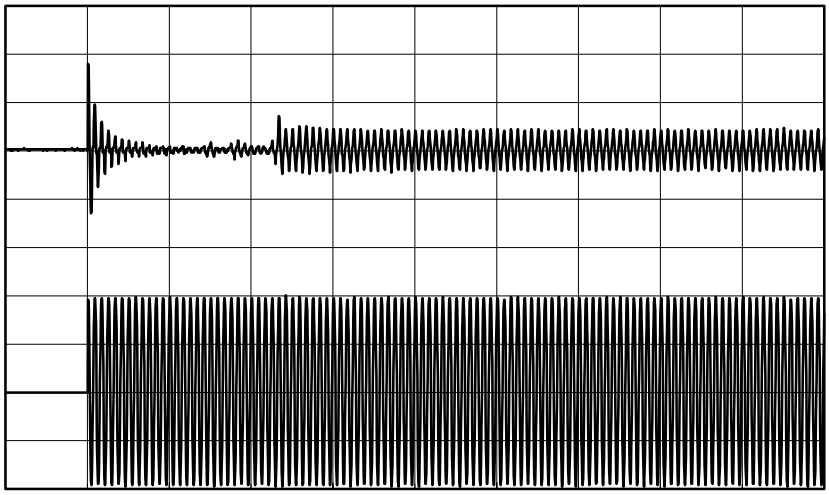

Input Voltage 277 V
Frequency 60 Hz
Load 100 %

Primary inrush current :
35.9 A
Secondary inrush current :
14.3 A

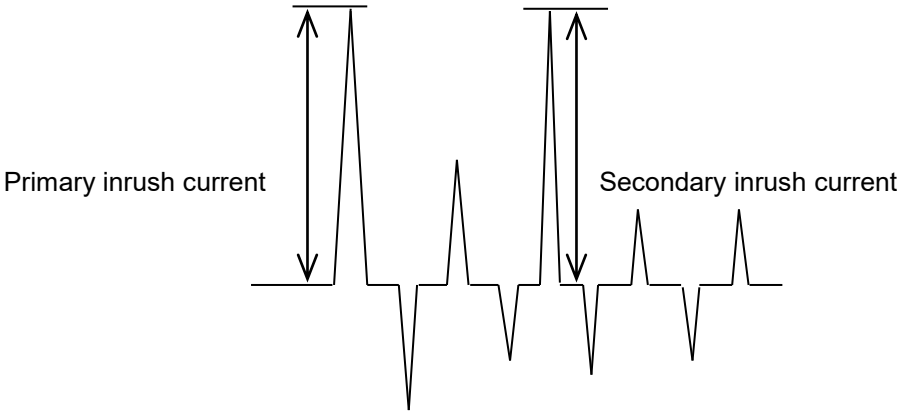

COSEL

Model	TUNS1200F48	
Item	Leakage Current	Temperature 25°C Testing Circuitry Figure B
Object	――――――――――――	

1.Results

[mA]

Standards	Testing Circuitry	Measuring Method	Input Volt.			Note
			100 [V]	200 [V]	240 [V]	
IEC60601-1	Figure B	Both phases	0.16	0.36	0.45	Operation
		One of phases	0.29	0.62	0.80	Stand by

The value for "One of phases" is the reference value only.

2.Condition

Leakage current value is concluded after measuring both phases of AC input and by choosing the larger one.

COSEL

Model	TUNS1200F48
Item	Line Regulation
Object	+48V25A

Temperature 25°C
Testing Circuitry Figure A

1.Graph

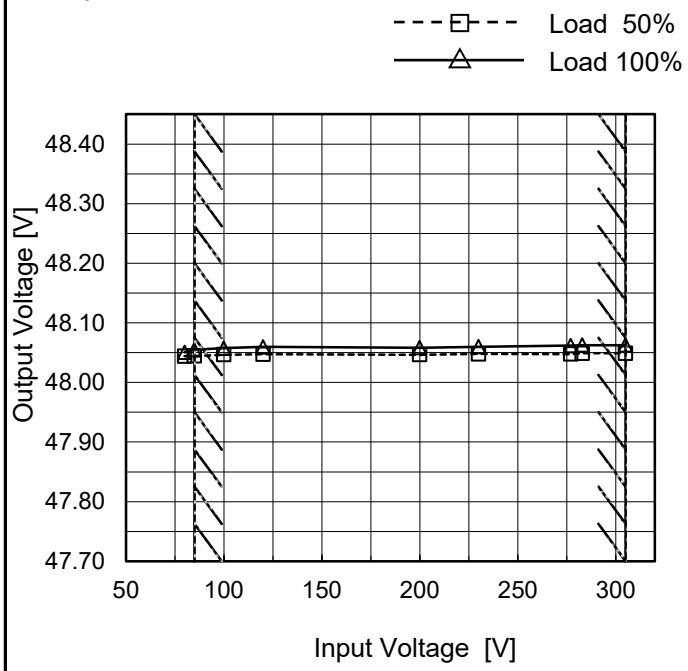

Note: Slanted line shows the range of the rated input voltage.

2.Values

Input Voltage [V]	Output Voltage [V]	
	Load 50%	Load 100%
80	48.044	48.051
85	48.044	48.055
100	48.046	48.057
120	48.047	48.060
200	48.047	48.058
230	48.048	48.060
277	48.048	48.062
283	48.049	48.063
305	48.049	48.063

COSEL

Model	TUNS1200F48
Item	Load Regulation
Object	+48V25A

Temperature 25°C
Testing Circuitry Figure A

1.Graph

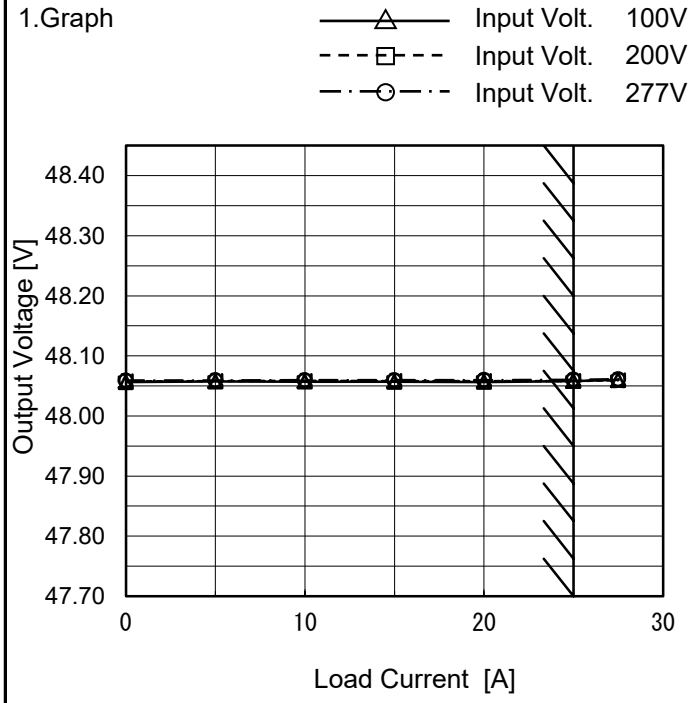

Note: Slanted line shows the range of the rated load current.

2.Values

Load Current [A]	Output Voltage [V]		
	Input Volt. 100[V]	Input Volt. 200[V]	Input Volt. 277[V]
0.0	48.056	48.058	48.059
5.0	48.057	48.058	48.059
10.0	48.057	48.058	48.060
15.0	48.057	48.058	48.060
20.0	48.057	48.058	48.060
25.0	48.058	48.058	48.060
27.5	48.060	48.060	48.061
--	-	-	-
--	-	-	-
--	-	-	-
--	-	-	-

Item	Ripple-Noise
Object	+48V25A

Temperature 25°C
Testing Circuitry Figure C

1.Graph

Input Voltage 200V
Load 100%

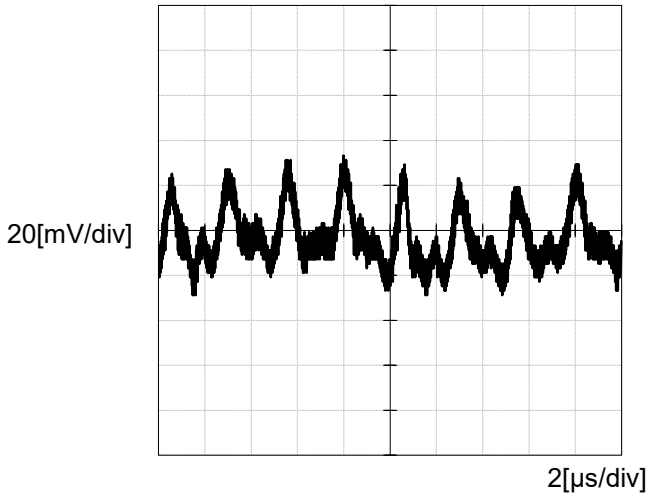

BC-11520

COSEL

Model	TUNS1200F48	
Item	Dynamic Load Response	Temperature 25°C Testing Circuitry Figure A
Object	+48V25A	

Input Volt. 100 V

Cycle 1000 ms

Response. t1=t2=50μs. Typ

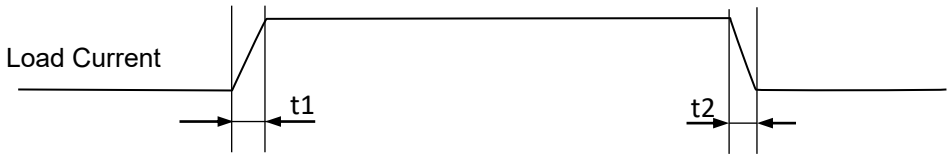

Load 0%(0A) ←→
Load 100%(25A)

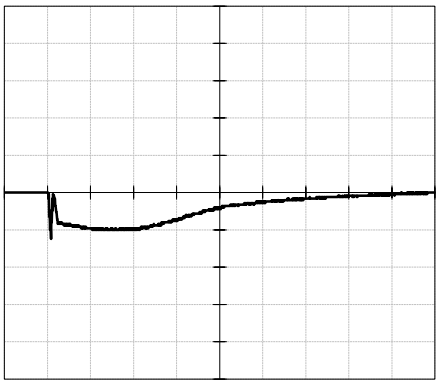

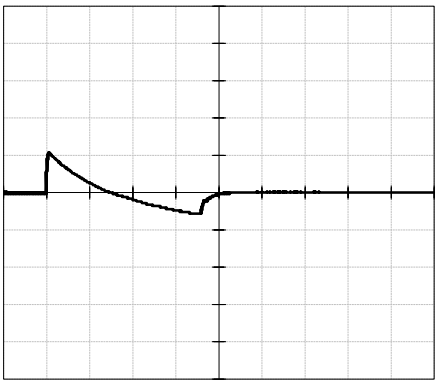

2[V/div]

1[ms/div]

10[ms/div]

Load 0%(0A) ←→
Load 50%(12.5A)

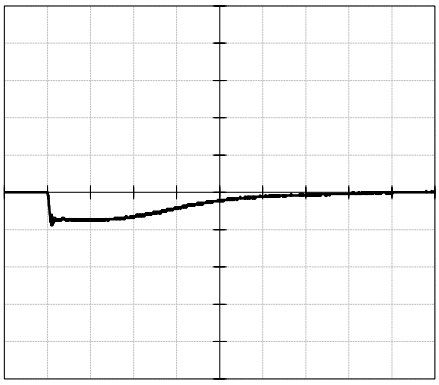

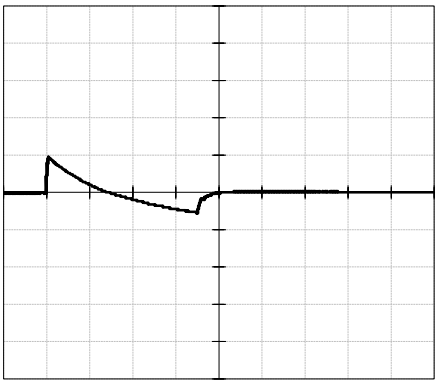

2[V/div]

1[ms/div]

10[ms/div]

COSEL

Model	TUNS1200F48	
Item	Rise and Fall Time	Temperature 25°C Testing Circuitry Figure A
Object	+48V25A	

1.Graph

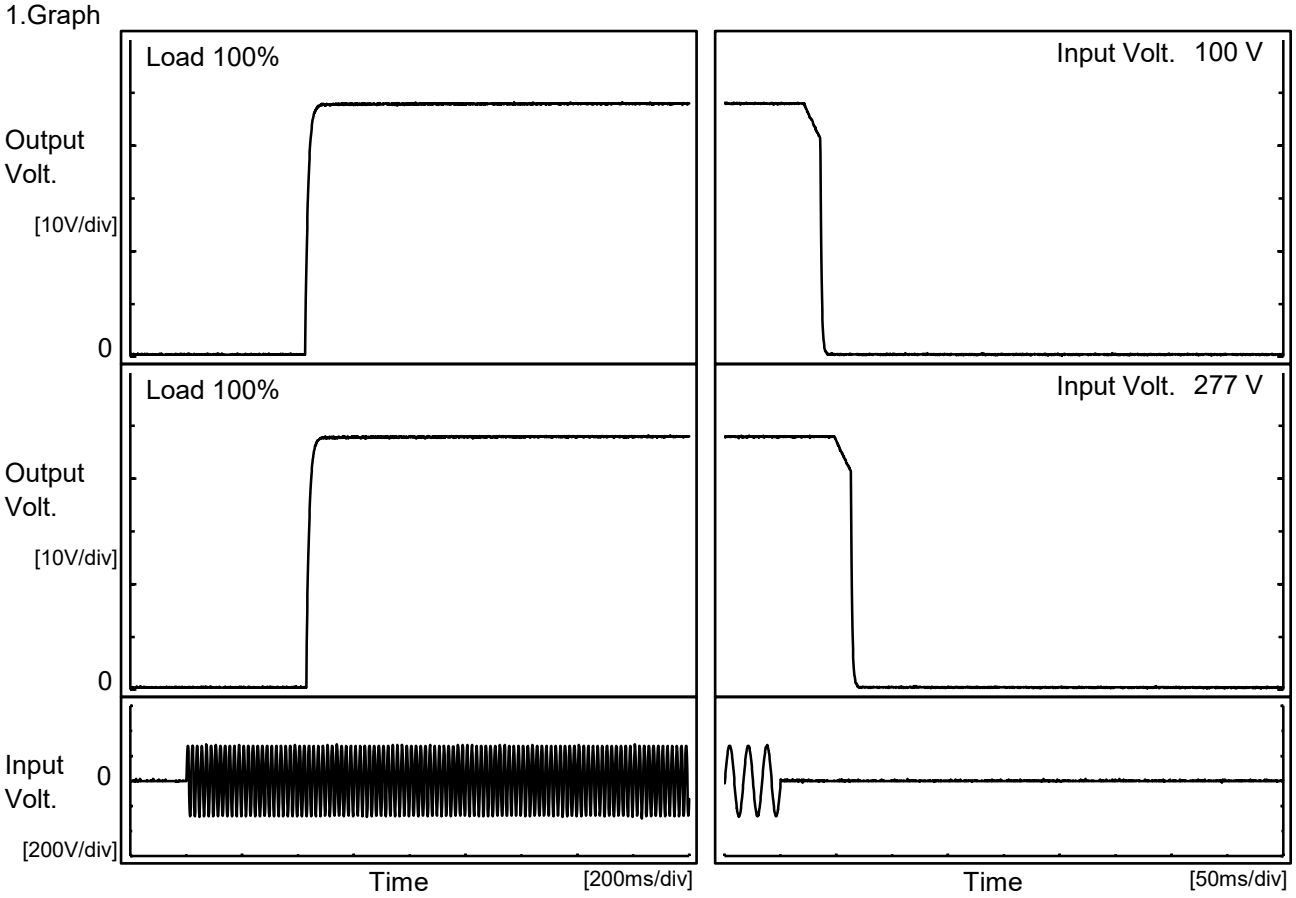

2.Values

[ms]

Input Volt. \ Time	Td	Tr	Ts	Th	Tf
100 V	426.0	24.0	450.0	31.0	7.3
277 V	430.0	23.0	453.0	57.7	7.8

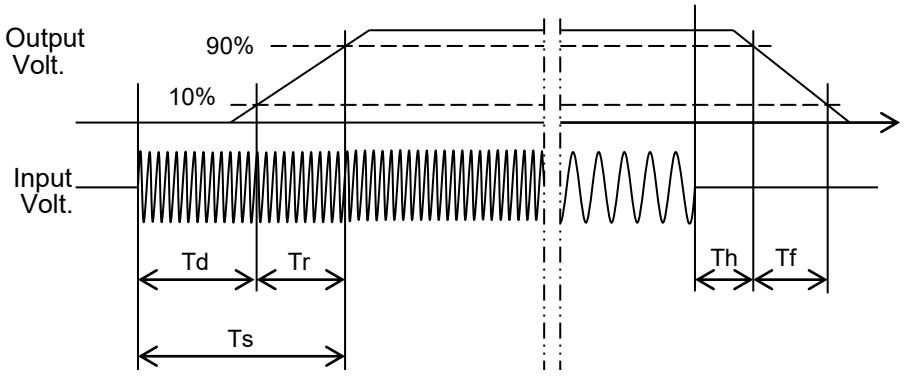

COSEL

Model	TUNS1200F48
Item	Hold-Up Time
Object	+48V25A

Temperature 25°C
Testing Circuitry Figure A

1.Graph

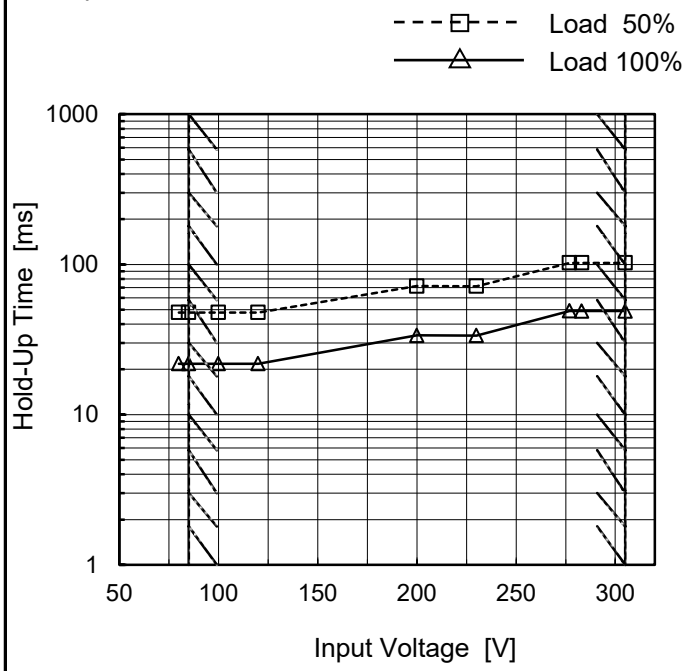

This duration covers from Shut-off of input voltage to the moment when output voltage descends to the rated range of voltage accuracy.
Note: Slanted line shows the range of the rated input voltage.

2.Values

Input Voltage [V]	Hold-Up Time [ms]	
	Load 50%	Load 100%
80	48	22
85	48	22
100	48	22
120	48	22
200	72	34
230	72	34
277	102	49
283	102	49
305	102	49

COSEL

Model	TUNS1200F48
Item	Instantaneous Interruption Compensation
Object	+48V25A

Temperature 25°C
Testing Circuitry Figure A

1.Graph

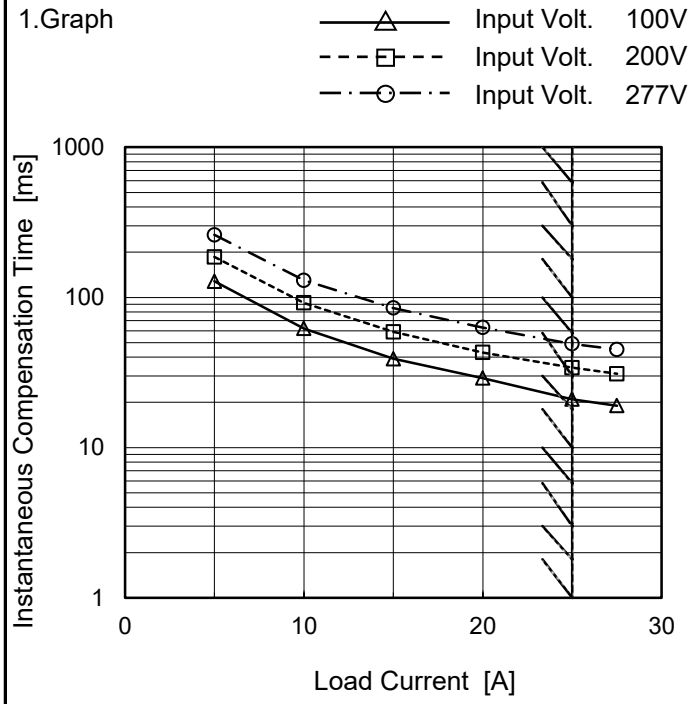

Note: Slanted line shows the range of the rated load current.

2.Values

Load Current [A]	Time [ms]		
	Input Volt. 100[V]	Input Volt. 200[V]	Input Volt. 277[V]
0.0	-	-	-
5.0	128	186	261
10.0	62	92	130
15.0	39	59	85
20.0	29	43	63
25.0	21	34	49
27.5	19	31	45
--	-	-	-
--	-	-	-
--	-	-	-
--	-	-	-

COSEL

Model	TUNS1200F48
Item	Overcurrent Protection
Object	+48V25A

Temperature 25°C
Testing Circuitry Figure A

1.Graph

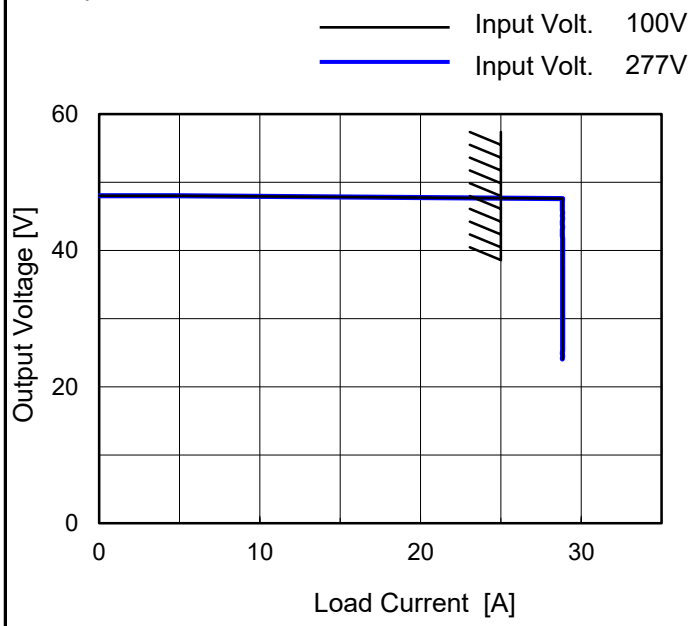

Note: Slanted line shows the range of the rated load current.

Hiccup mode activates when the output voltage is from 24 to 0V.

2.Values

Output Voltage [V]	Load Current [A]	
	Input Volt. 100[V]	Input Volt. 277[V]
45.6	28.83	28.83
43.2	28.83	28.83
38.4	28.83	28.83
33.6	28.83	28.84
28.8	28.84	28.83
--	-	-
--	-	-
--	-	-
--	-	-
--	-	-
--	-	-
--	-	-

COSEL

Model	TUNS1200F48
Item	Ambient Temperature Drift
Object	+48V25A

Testing Circuitry Figure A

1.Values

Load 100%

Ambient Temperature[℃]	Output Voltage [V]		
	Input Volt. 100V	Input Volt. 200V	Input Volt. 277V
-40	47.754	47.755	47.758
25	48.058	48.058	48.060
85	48.305	48.300	48.300
90	48.335	48.371	48.371

Item	Minimum Input Voltage for Regulated Output Voltage
Object	+48V25A

Testing Circuitry Figure A

1.Values

Ambient Temperature[℃]	Input Voltage [V]	
	Load 50%	Load 100%
-40	68	76
25	68	76
85	69	77
90	69	77

Item	Overvoltage Protection
Object	+48V25A

Testing Circuitry Figure A

1.Values

Load 0%

Ambient Temperature[℃]	Operating Point [V]	
	Input Volt. 100V	Input Volt. 277V
-40	57.25	57.25
25	57.78	57.66
85	58.19	58.07
90	58.25	58.19

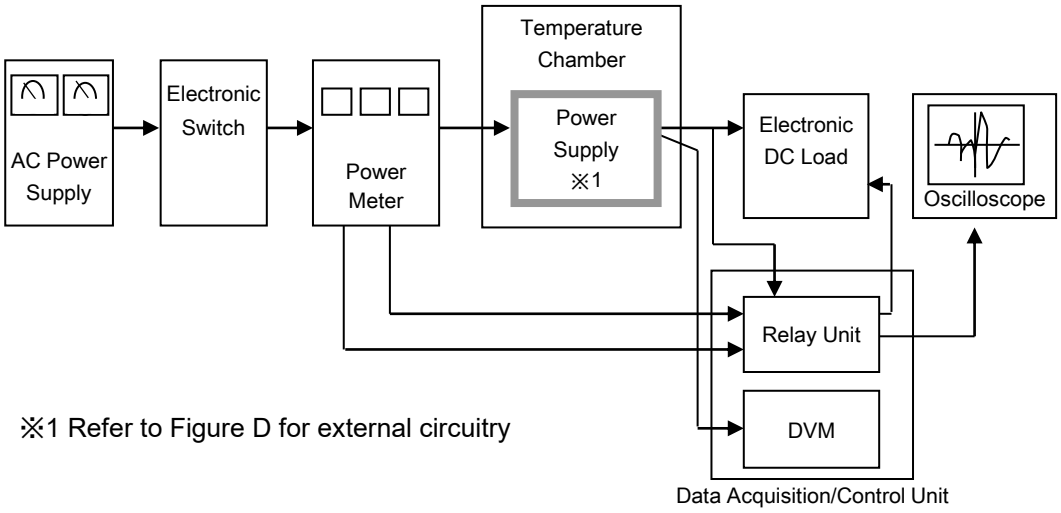

Figure A

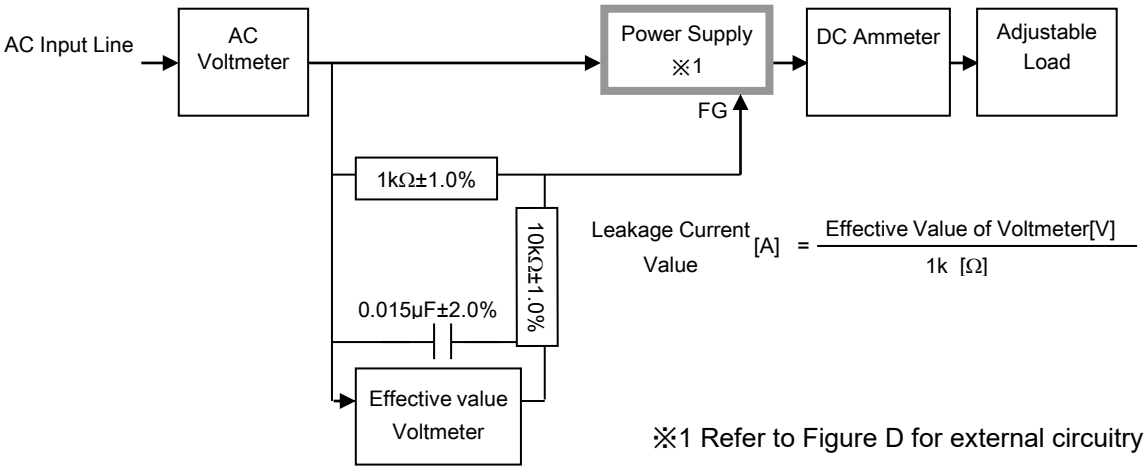

Figure B (IEC60601-1)

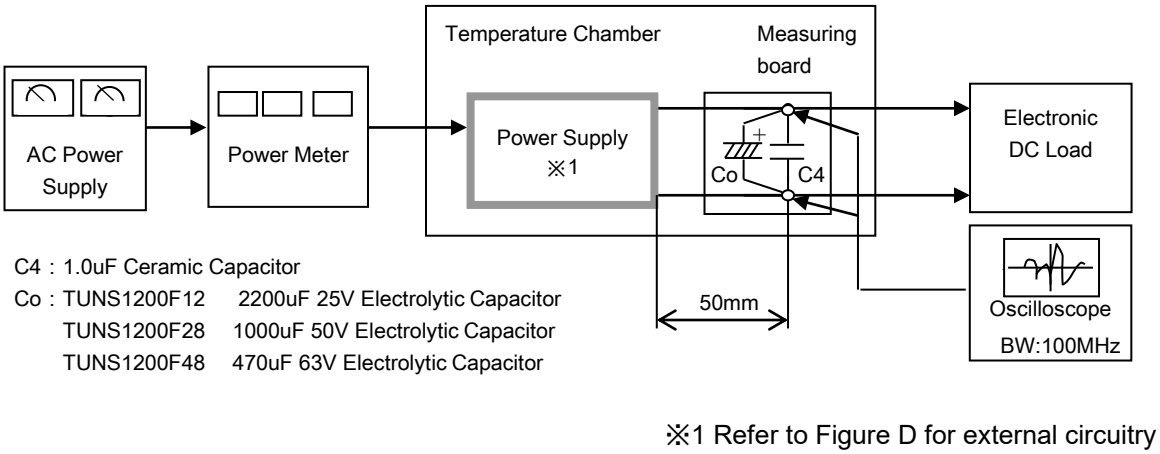

Figure C

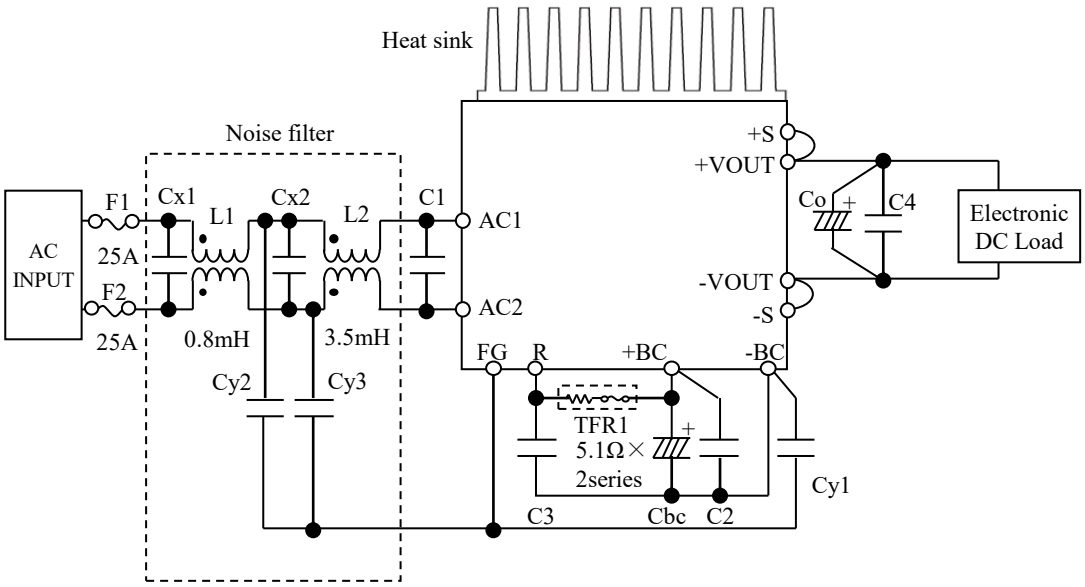

L1	: SCR25-200-1R7A008JH	
L2	: SC15-E350H	
Cx1,Cx2	: 1.5uF 310V Film Capacitor	
Cy1	: 2200pF 400V	
Cy2,Cy3	: 1500pF 400V	
C1	: 1.5uF 310V Film Capacitor × 2parallel	
C2,C3	: 1.0uF 630V Film Capacitor × 2parallel	
C4	: 1.0uF Ceramic Capacitor	
Cbc	: 470uF 450V Electrolytic Capacitor × 3parallel	(0≦Ta≦85℃)
	470uF 450V Electrolytic Capacitor × 6parallel	(-40≦Ta＜0℃)
Co	: TUNS1200F12	2200uF 25V Electrolytic Capacitor (0≦Ta≦85℃)
		2200uF 25V Electrolytic Capacitor × 3parallel (-40≦Ta＜0℃)
	TUNS1200F28	1000uF 50V Electrolytic Capacitor (0≦Ta≦85℃)
		1000uF 50V Electrolytic Capacitor × 3parallel (-40≦Ta＜0℃)
	TUNS1200F48	470uF 63V Electrolytic Capacitor (0≦Ta≦85℃)
		470uF 63V Electrolytic Capacitor × 3parallel (-40≦Ta＜0℃)

Ta：Ambient Temp.

Figure D