For Reference

TEST DATA OF TEPS45F24

Regulated DC Power Supply
October.3. 2023

Approved by : Satoshi Uetani
Design Manager

Prepared by : Riku Nishimura
Design Engineer

COSEL CO.,LTD.

COSEL

CONTENTS

1.Input Current (by Load Current) · 1
2.Efficiency (by Load Current) · 2
3.Power Factor (by Load Current) · 3
4.Inrush Current · 4
5.Leakage Current · 5
6.Line Regulation · 6
7.Load Regulation · 7
8.Ripple-Noise · 7
9.Dynamic Load Response · 8
10.Rise and Fall Time · 9
11.Hold-Up Time · 10
12.Instantaneous Interruption Compensation · · · · · · · · · · · · · · · · · 11
13.Overcurrent Protection · 12
14.Ambient Temperature Drift · 13
15.Minimum Input Voltage for Regulated Output Voltage · · · · · · · · · · 13
16.Overvoltage Protection · 13
17.Figure of Testing Circuitry · 14
(Final Page 15)

COSEL

Model	TEPS45F24
Item	Input Current (by Load Current)
Object	————————

Temperature 25°C
Testing Circuitry Figure A

1.Graph

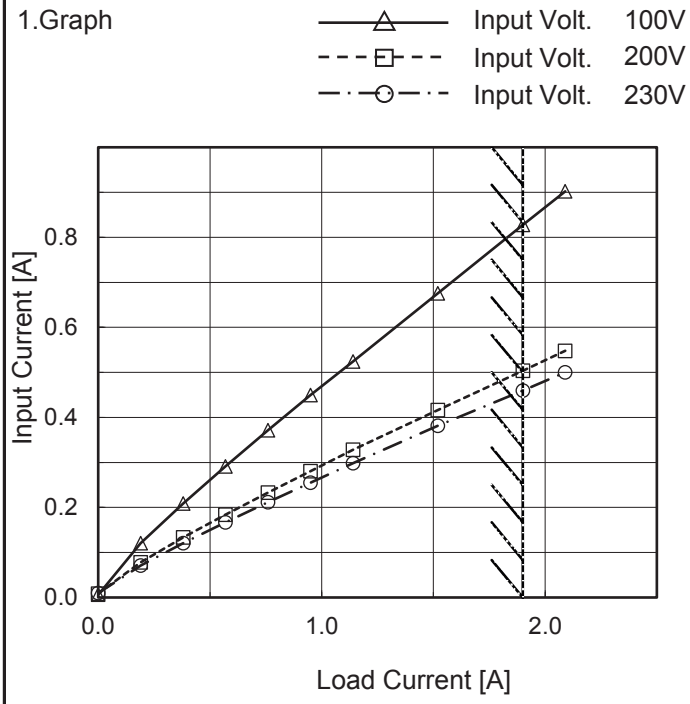

Note: Slanted line shows the range of the rated load current.

2.Values

Load Current [A]	Input Current [A]		
	Input Volt. 100[V]	Input Volt. 200[V]	Input Volt. 230[V]
0.00	0.006	0.009	0.010
0.19	0.120	0.078	0.071
0.38	0.209	0.133	0.121
0.57	0.291	0.184	0.167
0.76	0.371	0.233	0.212
0.95	0.450	0.281	0.255
1.14	0.524	0.328	0.298
1.52	0.676	0.416	0.382
1.90	0.827	0.504	0.460
2.09	0.902	0.548	0.500
--	-	-	-

BC-11940

COSEL

Model	TEPS45F24
Item	Efficiency (by Load Current)
Object	————————

Temperature 25°C
Testing Circuitry Figure A

1.Graph

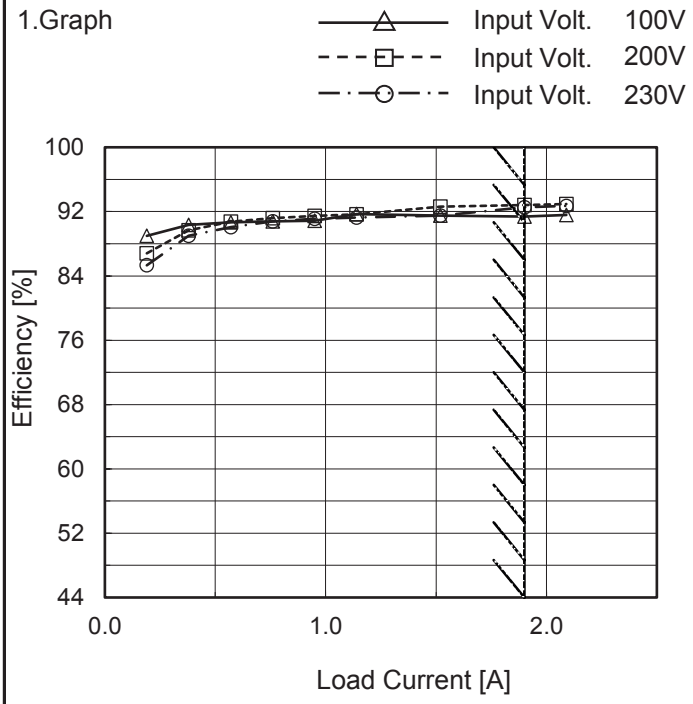

Note: Slanted line shows the range of the rated load current.

2.Values

Load Current [A]	Efficiency [%]		
	Input Volt. 100[V]	Input Volt. 200[V]	Input Volt. 230[V]
0.00	-	-	-
0.19	89.0	86.8	85.3
0.38	90.3	89.7	89.0
0.57	90.7	90.8	90.1
0.76	90.8	91.2	90.8
0.95	90.9	91.5	91.1
1.14	91.7	91.7	91.3
1.52	91.5	92.6	91.5
1.90	91.4	92.8	92.5
2.09	91.6	92.9	92.7
--	-	-	-

BC-11940

COSEL

Model	TEPS45F24
Item	Power Factor (by Load Current)
Object	————————

Temperature 25°C
Testing Circuitry Figure A

1.Graph

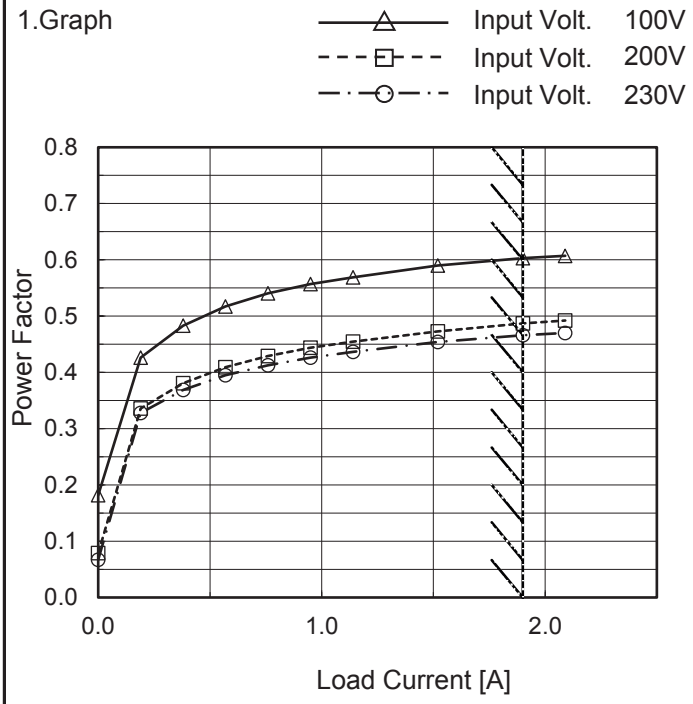

Note: Slanted line shows the range of the rated load current.

2.Values

Load Current [A]	Power Factor		
	Input Volt. 100[V]	Input Volt. 200[V]	Input Volt. 230[V]
0.00	0.182	0.079	0.067
0.19	0.426	0.336	0.328
0.38	0.483	0.381	0.369
0.57	0.517	0.409	0.395
0.76	0.541	0.429	0.412
0.95	0.557	0.444	0.426
1.14	0.569	0.455	0.437
1.52	0.590	0.473	0.454
1.90	0.603	0.487	0.466
2.09	0.607	0.492	0.470
--	-	-	-

BC-11940

COSEL

Model	TEPS45F24	
Item	Inrush Current	Temperature 25°C Testing Circuitry Figure A
Object	————————	

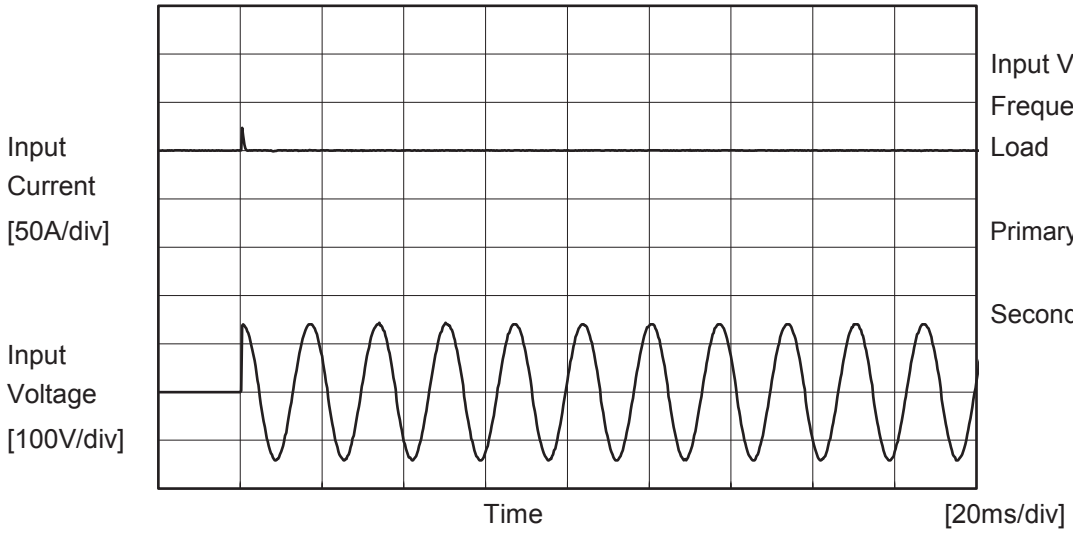

Input Voltage 100 V
Frequency 60 Hz
Load 100 %

Primary inrush current :
23.6 A
Secondary inrush current :
2.4 A

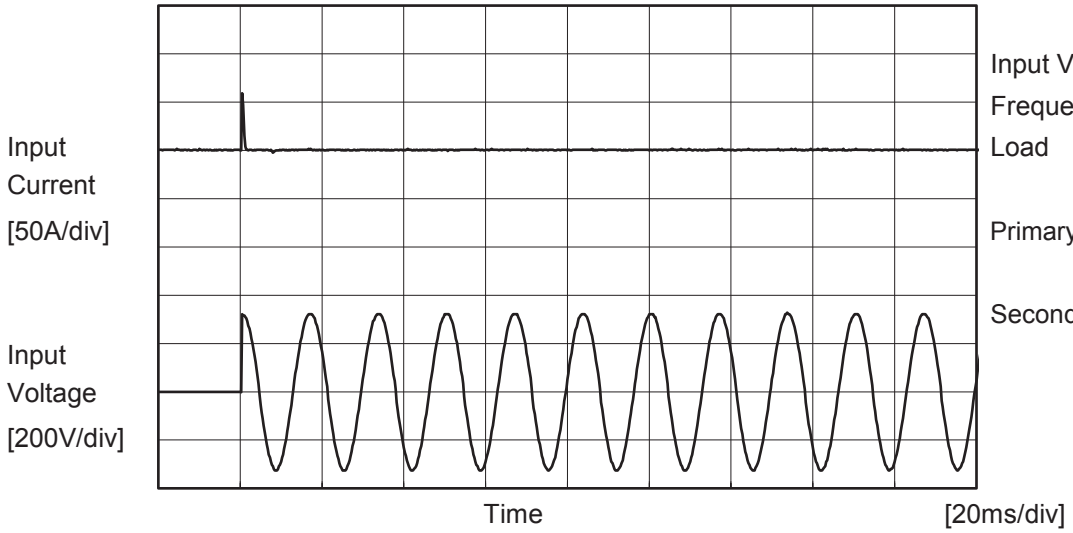

Input Voltage 230 V
Frequency 60 Hz
Load 100 %

Primary inrush current :
59.0 A
Secondary inrush current :
3.0 A

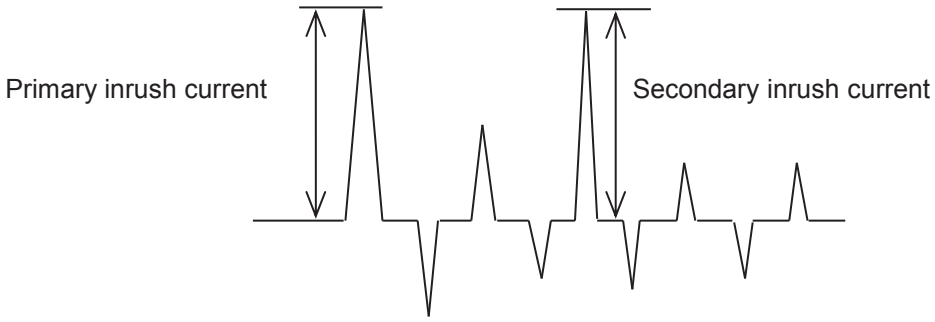

COSEL

Model	TEPS45F24	
Item	Leakage Current	Temperature 25°C Testing Circuitry Figure C
Object	————————————	

1.Results

[mA]

Standards	Testing Circuitry	Measuring Method	Input Volt.			Note
			100 [V]	230 [V]	264 [V]	
DEN-AN	Figure C-1	Both phases	0.04	0.08	0.09	Operation
		One of phases	0.05	0.12	0.14	Stand by
IEC62368-1	Figure C-2	Both phases	0.03	0.08	0.09	Operation
		One of phases	0.05	0.11	0.13	Stand by
	Figure C-3	Both phases	0.03	0.07	0.08	Operation
		One of phases	0.05	0.11	0.13	Stand by

The value for "One of phases" is the reference value only.

2.Condition

Leakage current value is concluded after measuring both phases of AC input and by choosing the larger one.

COSEL

Model	TEPS45F24
Item	Line Regulation
Object	+24V1.9A

Temperature 25°C
Testing Circuitry Figure A

1.Graph

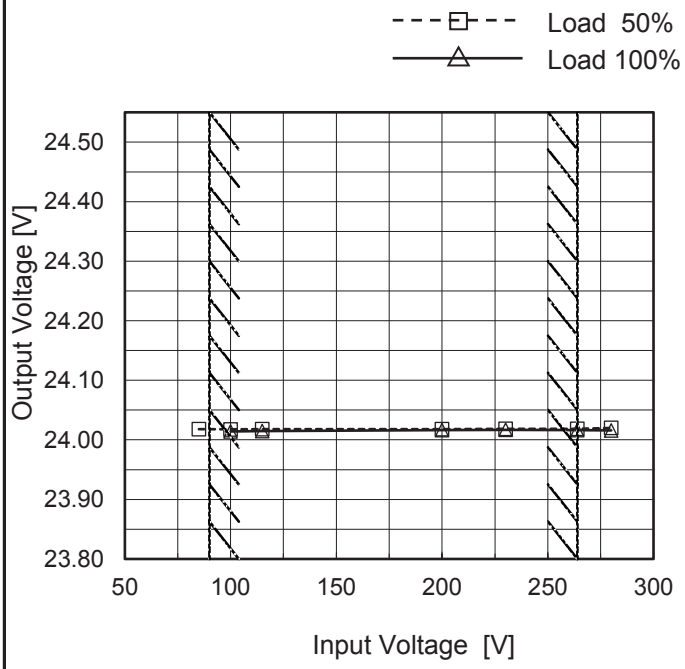

Note: Slanted line shows the range of the rated input voltage.

2.Values

Input Voltage [V]	Output Voltage [V]	
	Load 50%	Load 100%
85	24.018	-
100	24.018	24.014
115	24.018	24.015
200	24.018	24.016
230	24.019	24.017
264	24.019	24.016
280	24.020	24.016
--	-	-
--	-	-

COSEL

Model	TEPS45F24
Item	Load Regulation
Object	+24V1.9A

Temperature 25°C
Testing Circuitry Figure A

1.Graph

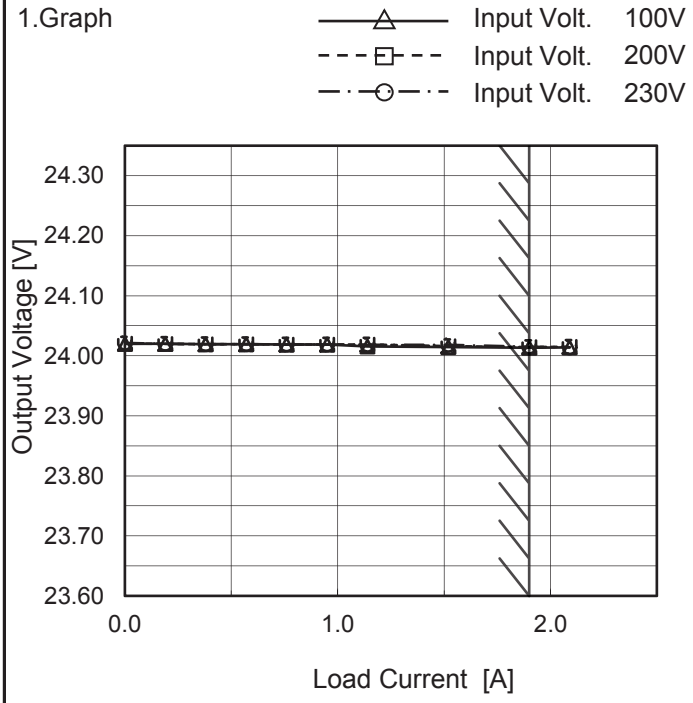

Note: Slanted line shows the range of the rated load current.

2.Values

Load Current [A]	Output Voltage [V]		
	Input Volt. 100[V]	Input Volt. 200[V]	Input Volt. 230[V]
0.00	24.020	24.021	24.021
0.19	24.020	24.020	24.020
0.38	24.019	24.019	24.019
0.57	24.019	24.019	24.019
0.76	24.019	24.019	24.019
0.95	24.019	24.019	24.019
1.14	24.015	24.019	24.019
1.52	24.014	24.016	24.018
1.90	24.013	24.014	24.015
2.09	24.014	24.015	24.014
--	--	--	--

Item	Ripple-Noise
Object	+24V1.9A

Temperature 25°C
Testing Circuitry Figure B

1.Graph

Input Voltage 230V
Load 100%

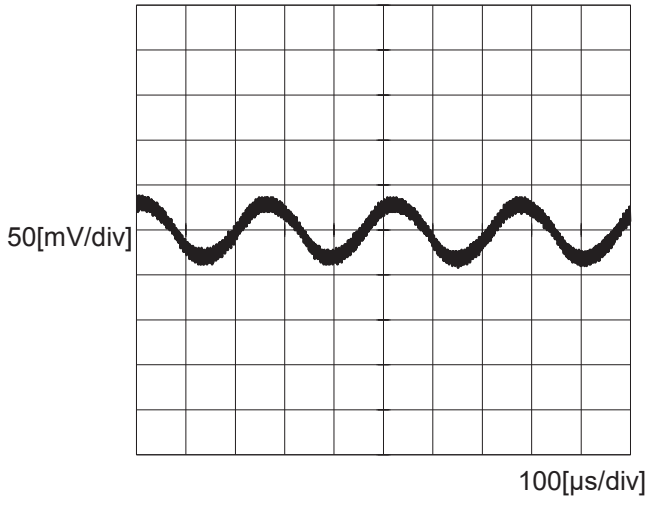

BC-11940

COSEL

Model	TEPS45F24	
Item	Dynamic Load Response	Temperature 25°C Testing Circuitry Figure A
Object	+24V1.9A	

Input Volt. 230 V

Cycle 1000 ms

Response. t1=t2=50µs. Typ

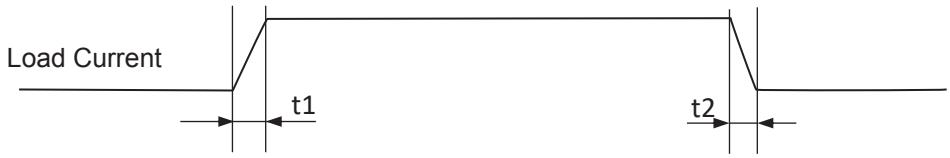

Load 0%(0A) ←→
Load 100%(1.9A)

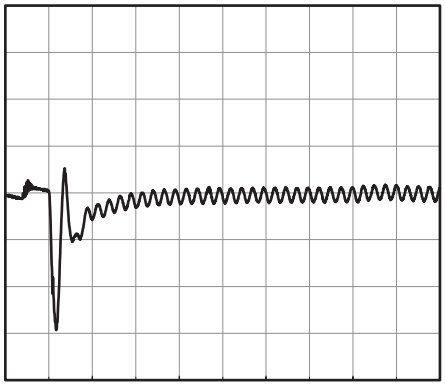

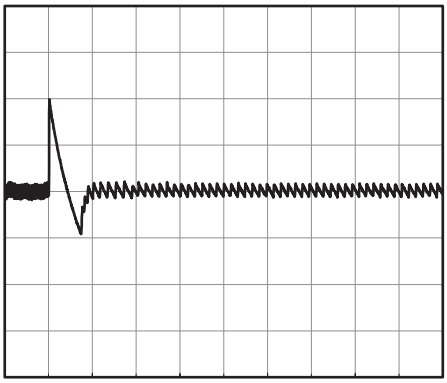

200[mV/div]

1[ms/div]

10[ms/div]

Load 50%(0.95A) ←→
Load 100%(1.9A)

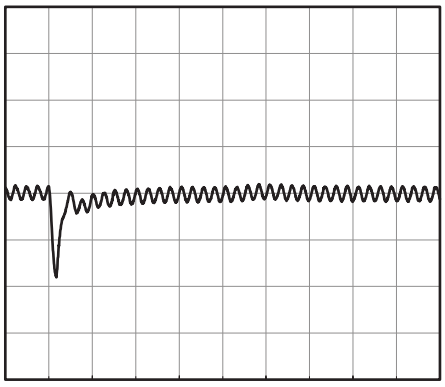

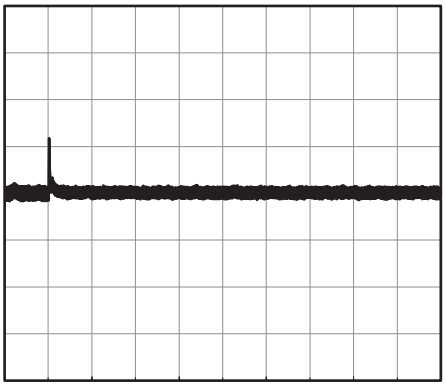

200[mV/div]

1[ms/div]

10[ms/div]

Load 0%(0A) ←→
Load 50%(0.95A)

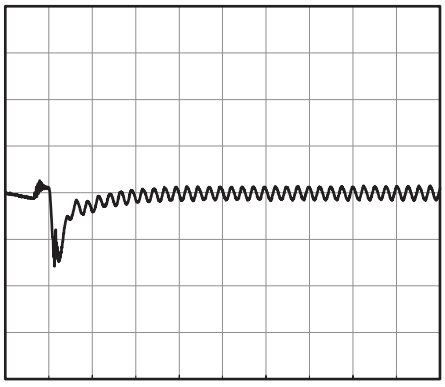

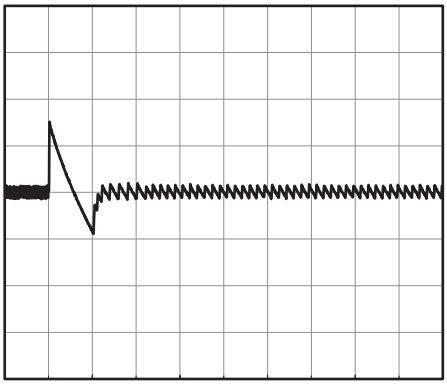

200[mV/div]

1[ms/div]

10[ms/div]

COSEL

Model	TEPS45F24	
Item	Rise and Fall Time	Temperature 25°C Testing Circuitry Figure A
Object	+24V1.9A	

1.Graph

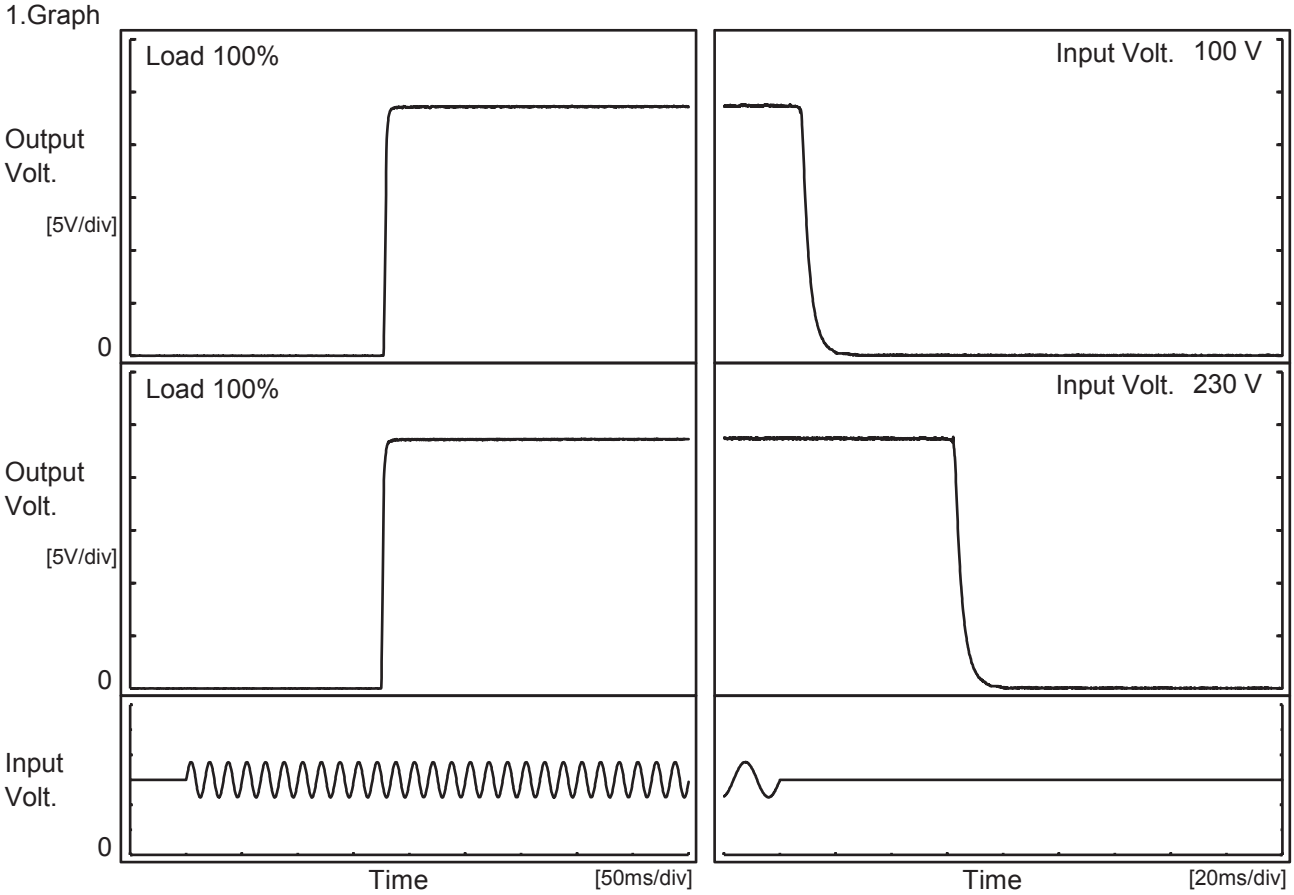

2.Values

[ms]

Input Volt. \ Time	Td	Tr	Ts	Th	Tf
100 V	177.5	4.0	181.5	7.8	6.4
230 V	175.3	4.3	179.5	62.5	6.4

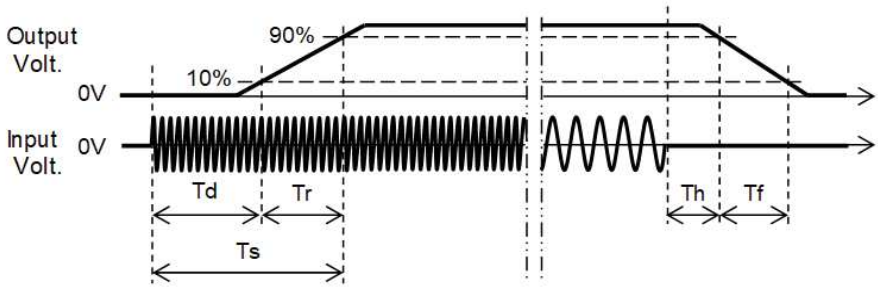

COSEL

Model	TEPS45F24
Item	Hold-Up Time
Object	+24V1.9A

Temperature 25°C
Testing Circuitry Figure A

1.Graph

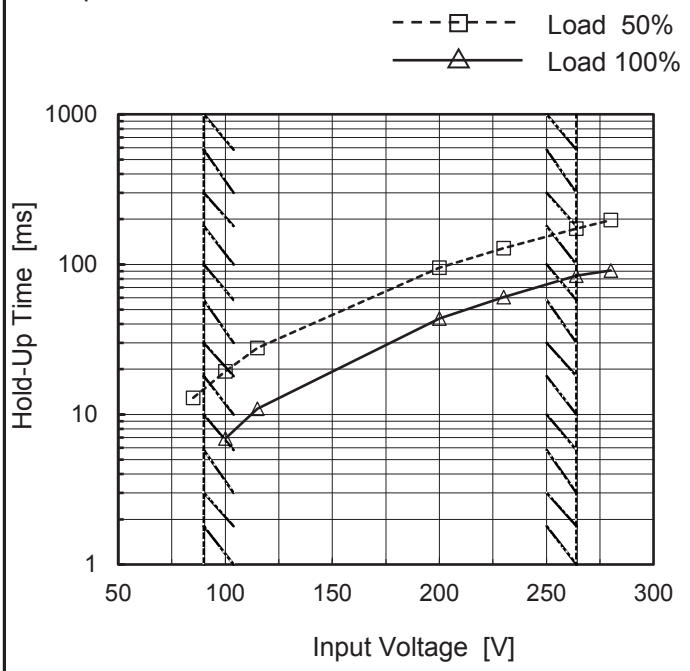

This duration covers from Shut-off of input voltage to the moment when output voltage descends to the rated range of voltage accuracy.
Note: Slanted line shows the range of the rated input voltage.

2.Values

Input Voltage [V]	Hold-Up Time [ms]	
	Load 50%	Load 100%
85	13	-
100	19	7
115	28	11
200	95	44
230	128	60
264	173	84
280	197	91
--	-	-
--	-	-

BC-11940

COSEL

Model	TEPS45F24
Item	Instantaneous Interruption Compensation
Object	+24V1.9A

Temperature 25°C
Testing Circuitry Figure A

1.Graph

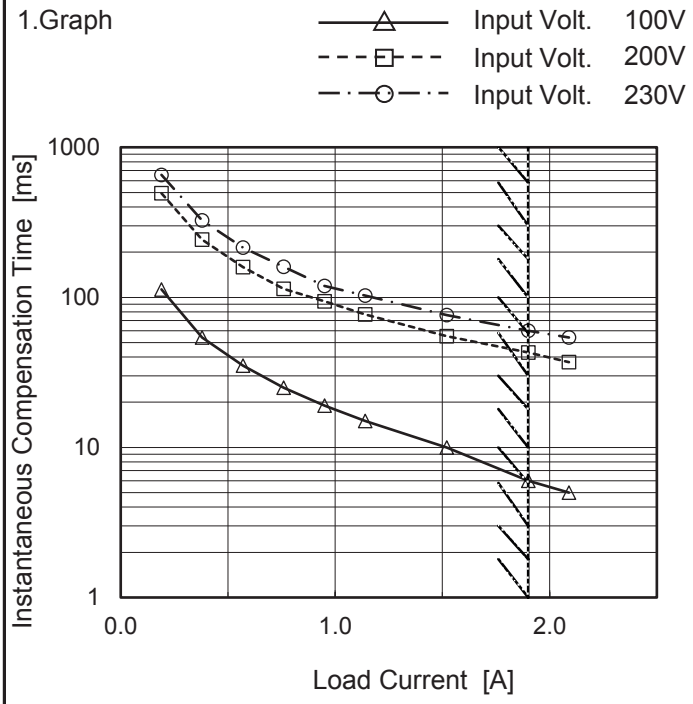

Note: Slanted line shows the range of the rated load current.

2.Values

Load Current [A]	Time [ms]		
	Input Volt. 100[V]	Input Volt. 200[V]	Input Volt. 230[V]
0.00	-	-	-
0.19	113	494	655
0.38	54	243	326
0.57	35	159	215
0.76	25	114	160
0.95	19	94	119
1.14	15	77	103
1.52	10	55	76
1.90	6	43	60
2.09	5	37	54
--	-	-	-

COSEL

Model	TEPS45F24
Item	Overcurrent Protection
Object	+24V1.9A

Temperature 25°C
Testing Circuitry Figure A

1.Graph

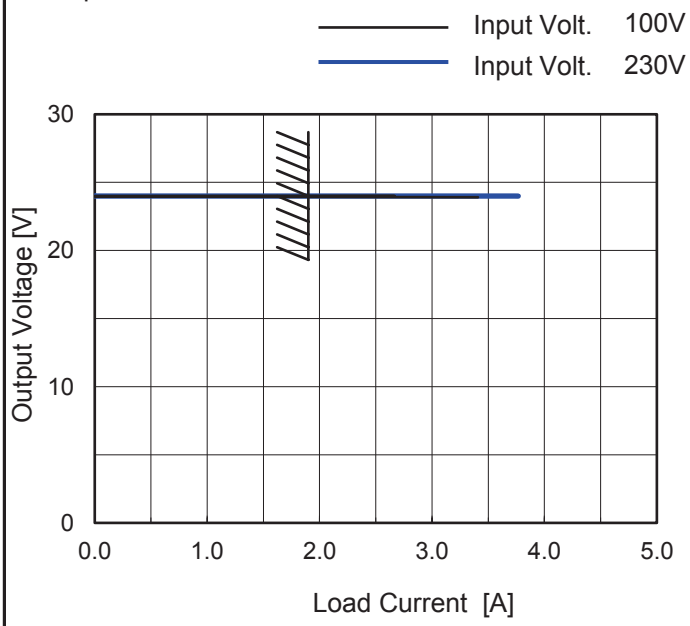

Note: Slanted line shows the range of the rated load current.

Overcurrent protection is Hiccup mode.

2.Values

Output Voltage [V]	Load Current [A]	
	Input Volt. 100[V]	Input Volt. 230[V]
24.0	2.67	3.77
22.8	-	-
21.6	-	-
19.2	-	-
16.8	-	-
14.4	-	-
12.0	-	-
9.6	-	-
7.2	-	-
4.8	-	-
2.4	-	-
0.0	-	-

COSEL

Model	TEPS45F24
Item	Ambient Temperature Drift
Object	+24V1.9A

Testing Circuitry Figure A

1.Values

Load 100%

Ambient Temperature[℃]	Output Voltage [V]		
	Input Volt. 100V	Input Volt. 200V	Input Volt. 230V
-10	24.023	24.025	24.026
25	24.015	24.017	24.018
50	24.006	24.008	24.009

Item	Minimum Input Voltage for Regulated Output Voltage
Object	+24V1.9A

Testing Circuitry Figure A

1.Values

Ambient Temperature[℃]	Input Voltage [V]	
	Load 50%	Load 100%
-10	61	61
25	61	61
50	61	61

Item	Overvoltage Protection
Object	+24V1.9A

Testing Circuitry Figure A

1.Values

Load 0%

Ambient Temperature[℃]	Operating Point [V]	
	Input Volt. 100V	Input Volt. 230V
-10	29.26	29.26
25	29.28	29.28
50	29.28	29.28

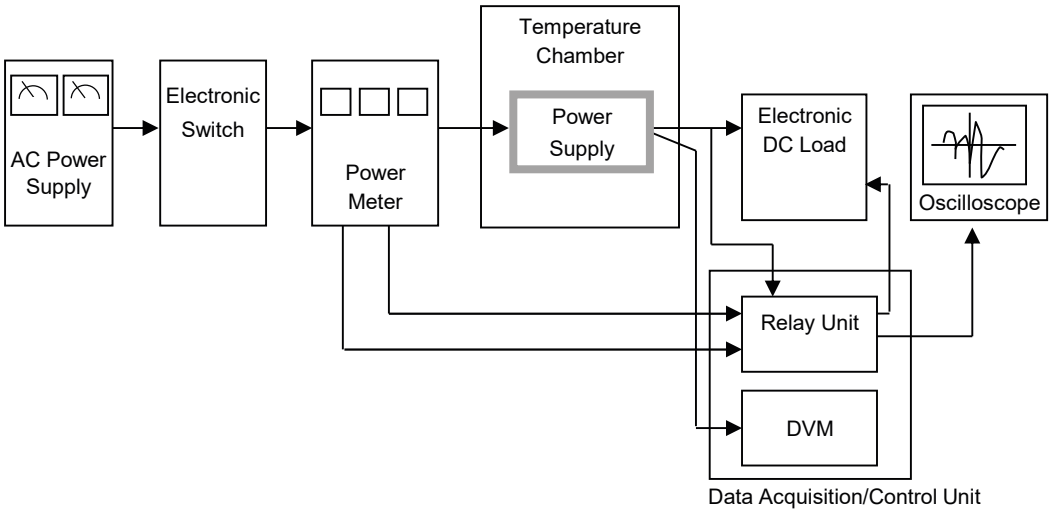

Figure A

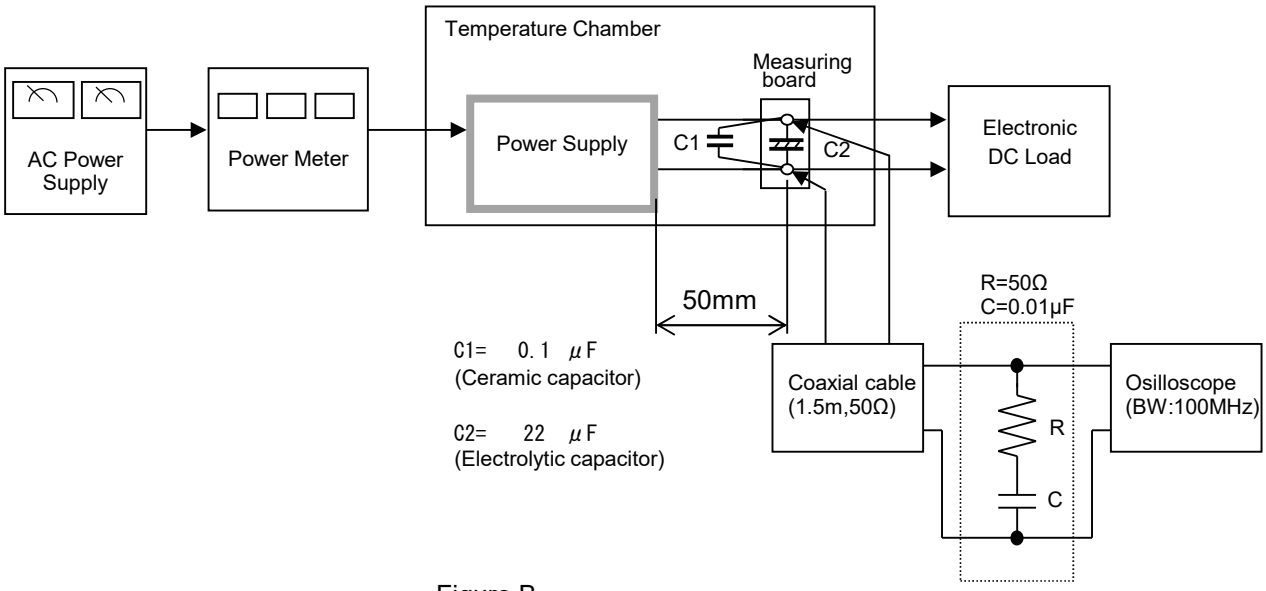

Figure B

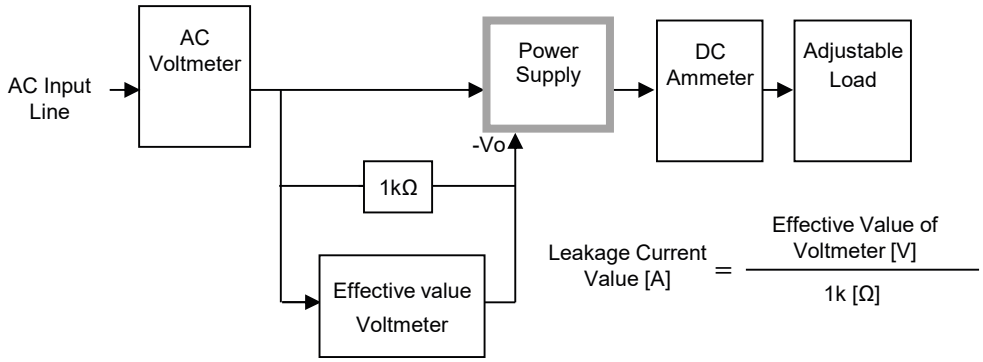

Figure C-1 (DEN-AN)

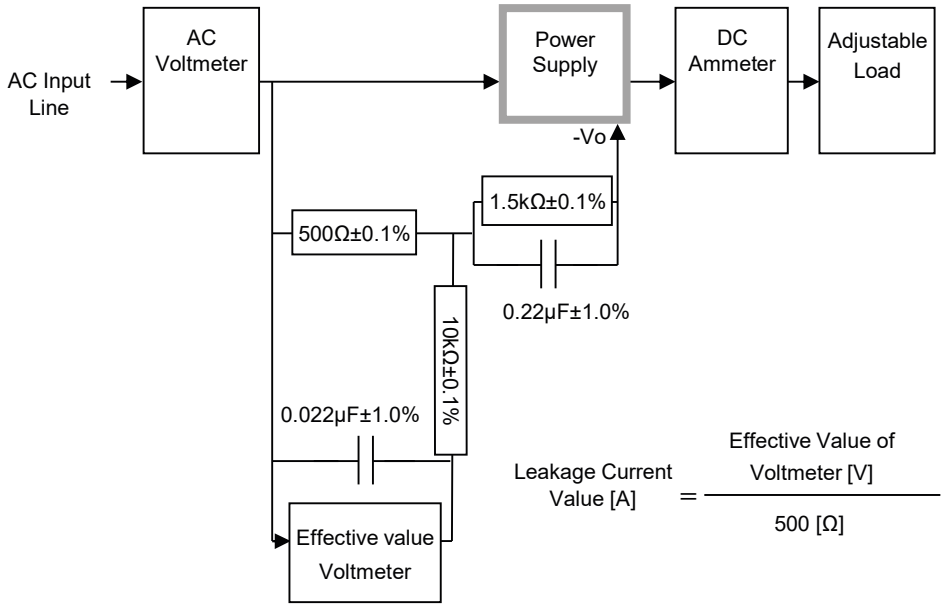

Figure C-2 (IEC62368-1 refer to IEC60990 Fig.4)

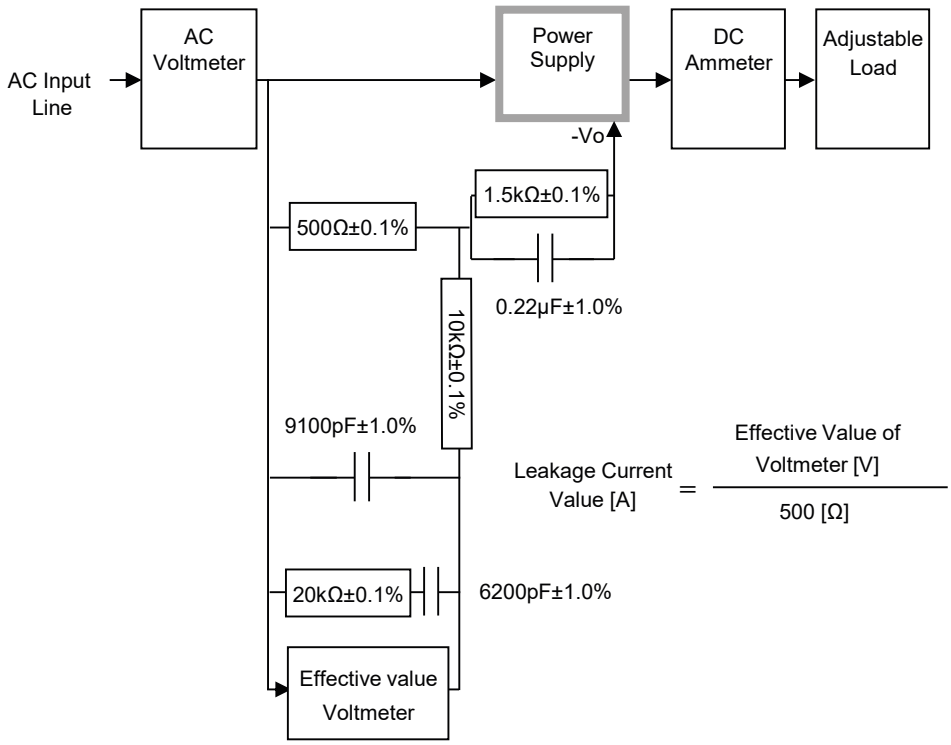

Figure C-3 (IEC62368-1 refer to IEC60990 Fig.5)