COSEL

参考資料

TEST DATA OF STMGFS804805

Regulated DC Power Supply
May 18, 2021

Approved by : Hironobu Shimizu — Design Manager

Prepared by : Hikaru Inagaki — Design Engineer

COSEL CO.,LTD.

参考資料

COSEL

CONTENTS

1.Input Current (by Load Current) ・・・・・・・・・・・・・・・・・・・・・・・・ 1
2.Efficiency (by Load Current) ・・・・・・・・・・・・・・・・・・・・・・・・ 2
3.Line Regulation ・・・・・・・・・・・・・・・・・・・・・・・・・・・・・・・・ 3
4.Load Regulation ・・・・・・・・・・・・・・・・・・・・・・・・・・・・・・・・ 4
5.Ripple-Noise ・・・・・・・・・・・・・・・・・・・・・・・・・・・・・・・・・・ 4
6.Rise and Fall Time ・・・・・・・・・・・・・・・・・・・・・・・・・・・・・・ 5
7.Overcurrent Protection ・・・・・・・・・・・・・・・・・・・・・・・・・・・・ 6
8.Ambient Temperature Drift ・・・・・・・・・・・・・・・・・・・・・・・・・・ 7
9.Minimum Input Voltage for Regulated Output Voltage ・・・・・・・・・・・・ 7
10.Overvoltage Protection ・・・・・・・・・・・・・・・・・・・・・・・・・・・・ 7
11.Figure of Testing Circuitry ・・・・・・・・・・・・・・・・・・・・・・・・・・ 8
(Final Page 8)

COSEL

Model	STMGFS804805
Item	Input Current (by Load Current)
Object	――――――――

Temperature 25°C
Testing Circuitry Figure A

1.Graph

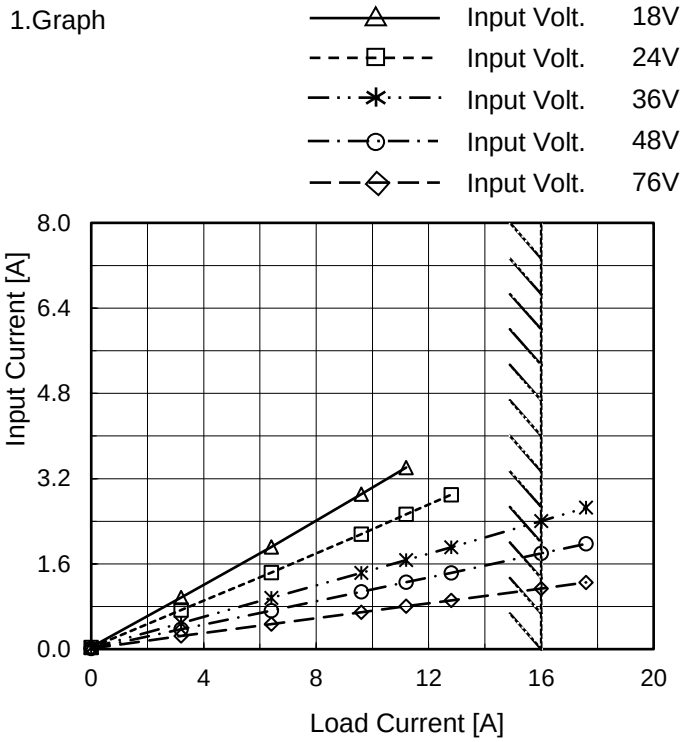

Note: Slanted line shows the range of the rated load current.

2.Values

Load Current [A]	Input Current [A]				
	Input Volt. 18[V]	Input Volt. 24[V]	Input Volt. 36[V]	Input Volt. 48[V]	Input Volt. 76[V]
0.0	0.038	0.031	0.024	0.011	0.011
3.2	0.970	0.731	0.488	0.371	0.247
6.4	1.916	1.435	0.962	0.725	0.467
9.6	2.907	2.160	1.431	1.076	0.692
11.2	3.409	2.532	1.672	1.255	0.803
12.8	- ※1	2.899	1.910	1.432	0.915
16.0	- ※1	- ※2	2.403	1.796	1.138
17.6	- ※1	- ※2	2.654	1.977	1.253
--	-	-	-	-	-
--	-	-	-	-	-
--	-	-	-	-	-

※1 Maximam output current at minimum input Voltage is 70% of rated load current.
※2 Maximam output current at 24V input Voltage is 80% of rated load current.
Refer to instruction manuals for details of input derating.

BC-11725

COSEL

Model	STMGFS804805
Item	Efficiency (by Load Current)
Object	――――――――

Temperature 25°C
Testing Circuitry Figure A

1.Graph

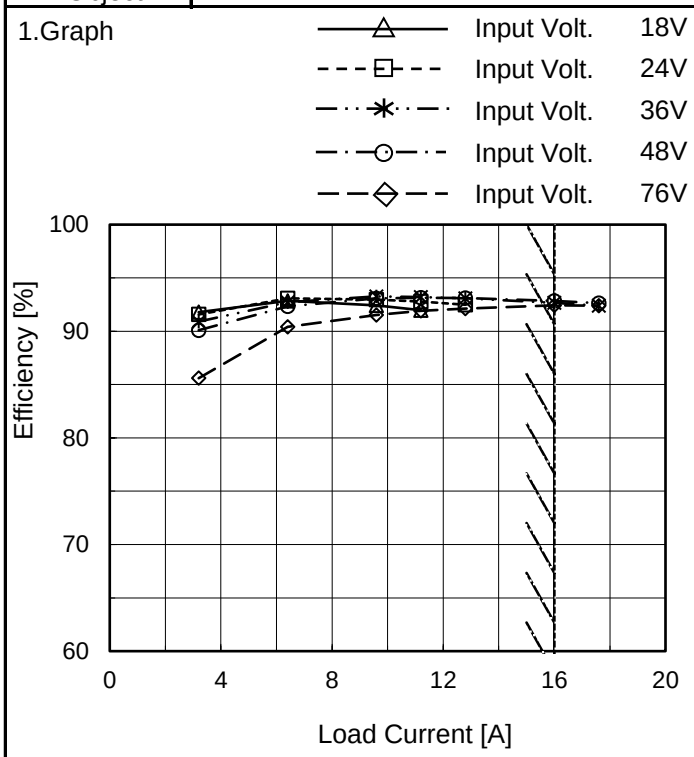

Note: Slanted line shows the range of the rated load current.

2.Values

Load Current [A]	Efficiency [%]				
	Input Volt. 18[V]	Input Volt. 24[V]	Input Volt. 36[V]	Input Volt. 48[V]	Input Volt. 76[V]
0.0	-	-	-	-	-
3.2	91.8	91.6	90.9	90.1	85.6
6.4	92.9	93.1	92.7	92.3	90.4
9.6	92.4	93.0	93.3	93.1	91.5
11.2	92.0	92.8	93.2	93.1	91.9
12.8	- ※1	92.5	93.1	93.1	92.1
16.0	- ※1	- ※2	92.7	92.8	92.4
17.6	- ※1	- ※2	92.4	92.6	92.4
--	-	-	-	-	-
--	-	-	-	-	-
--	-	-	-	-	-

※1 Maximam output current at minimum input Voltage is 70% of rated load current.
※2 Maximam output current at 24V input Voltage is 80% of rated load current.
Refer to instruction manuals for details of input derating.

BC-11725

COSEL

Model	STMGFS804805
Item	Line Regulation
Object	+5V16A

Temperature 25°C
Testing Circuitry Figure A

1.Graph

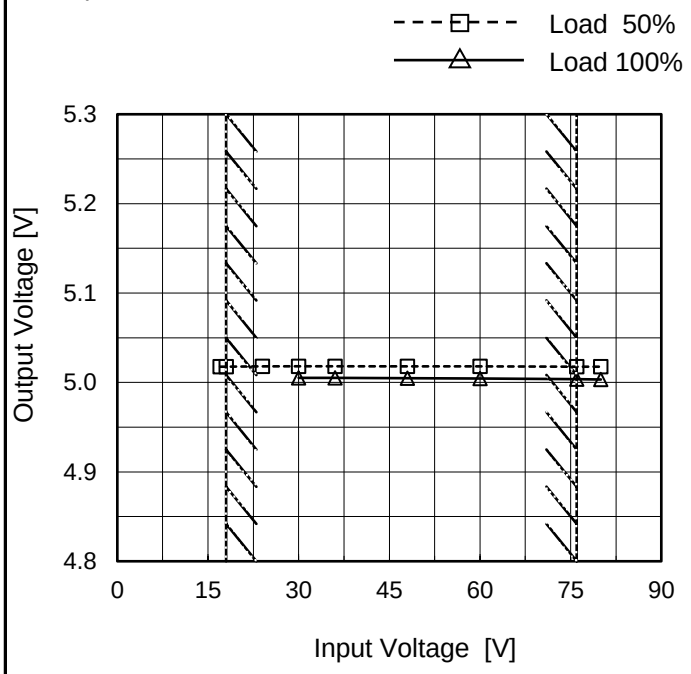

Note: Slanted line shows the range of the rated input voltage.

2.Values

Input Voltage [V]	Output Voltage [V]	
	Load 50%	Load 100%
17	5.018	- ※1
18	5.018	- ※1
24	5.018	- ※2
30	5.018	5.005
36	5.018	5.005
48	5.018	5.005
60	5.018	5.004
76	5.018	5.004
80	5.018	5.003

※1 Maximam output current at minimum input Voltage is 70% of rated load current.
※2 Maximam output current at 24V input Voltage is 80% of rated load current.
Refer to instruction manuals for details of input derating.

BC-11725

COSEL

Model	STMGFS804805
Item	Load Regulation
Object	+5V16A

Temperature 25°C
Testing Circuitry Figure A

1.Graph

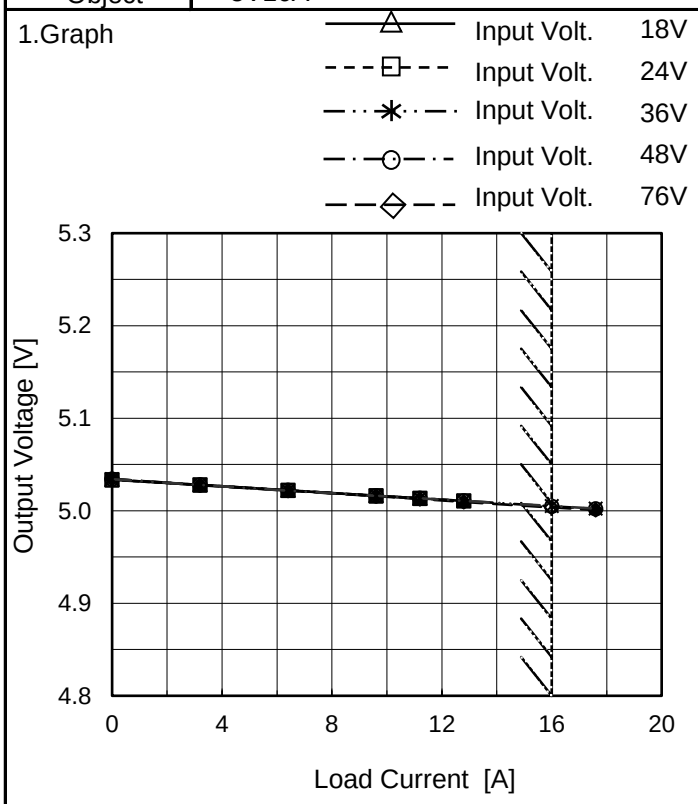

Note: Slanted line shows the range of the rated load current.

2.Values

Load Current [A]	Output Voltage [V]				
	Input Volt. 18[V]	Input Volt. 24[V]	Input Volt. 36[V]	Input Volt. 48[V]	Input Volt. 76[V]
0.0	5.034	5.034	5.034	5.034	5.034
3.2	5.028	5.028	5.028	5.028	5.028
6.4	5.022	5.022	5.022	5.022	5.022
9.6	5.016	5.016	5.016	5.016	5.016
11.2	5.013	5.013	5.013	5.013	5.013
12.8	- ※1	5.011	5.011	5.011	5.010
16.0	- ※1	- ※2	5.005	5.005	5.004
17.6	- ※1	- ※2	5.002	5.002	5.001
--	-	-	-	-	-
--	-	-	-	-	-
--	-	-	-	-	-

※1 Maximam output current at minimum input Voltage is 70% of rated load current.
※2 Maximam output current at 18V input Voltage is 80% of rated load current.
Refer to instruction manuals for details of input derating.

Item	Ripple-Noise
Object	+5V16A

Temperature 25°C
Testing Circuitry Figure B

1.Graph

Input Voltage 48V
Load 100%

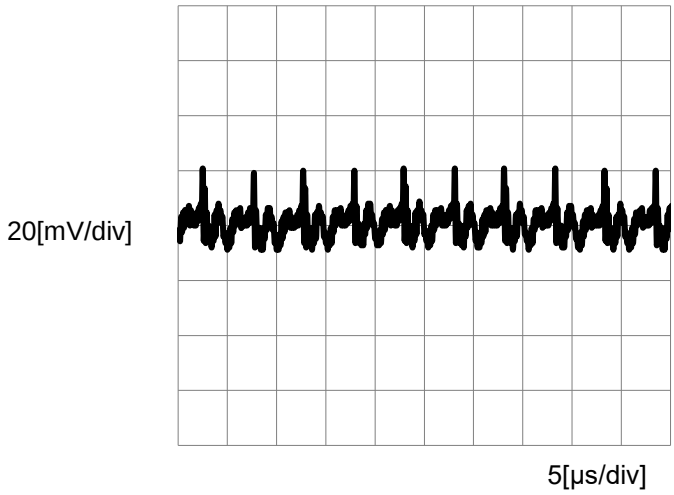

BC-11725

COSEL

Model	STMGFS804805
Item	Rise and Fall Time
Object	+5V16A

Temperature 25°C
Testing Circuitry Figure A

1.Graph

Input Volt. 48 V

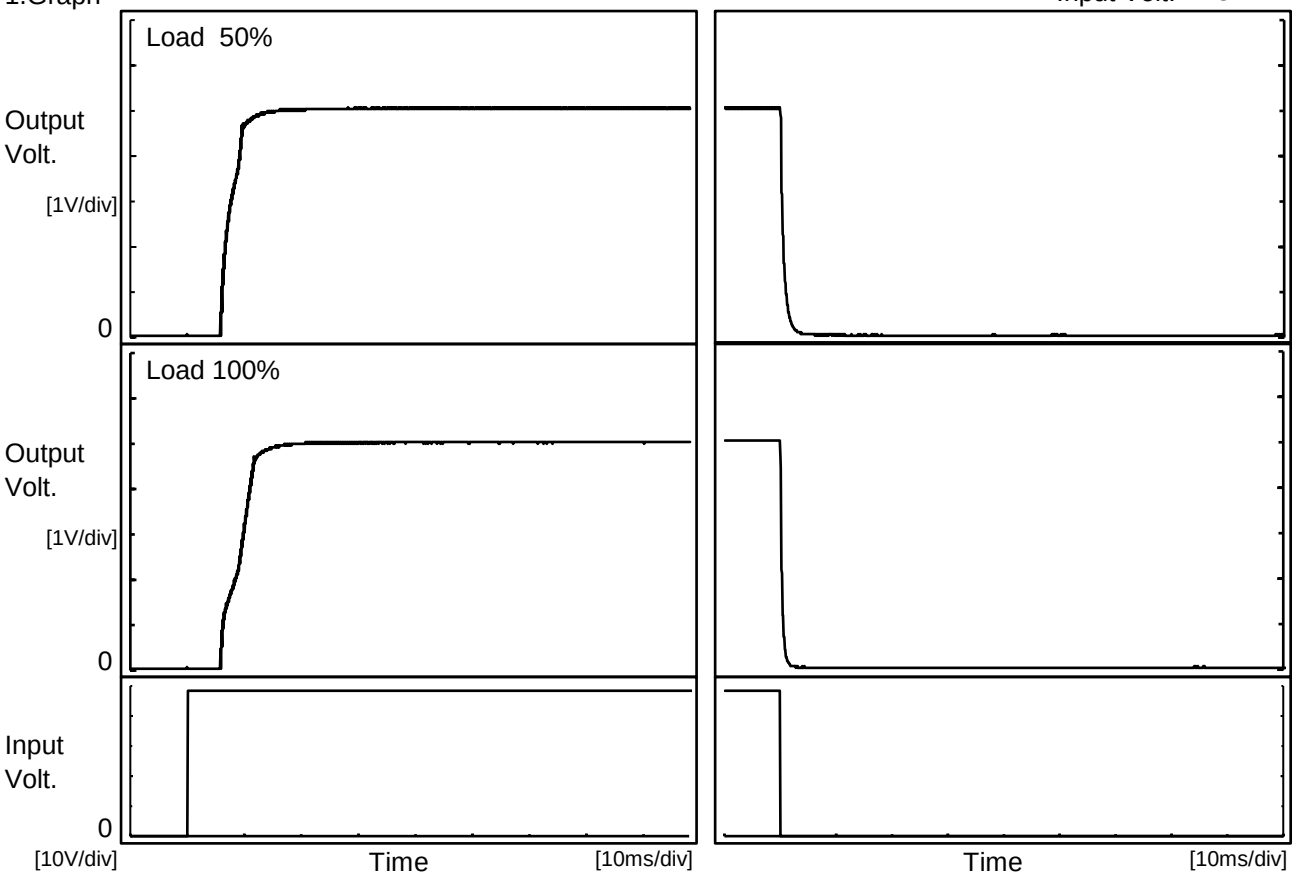

2.Values

[ms]

Load \ Time	Td	Tr	Ts	Th	Tf
50 %	6.1	3.7	9.8	0.2	1.4
100 %	6.0	5.8	11.8	0.1	0.8

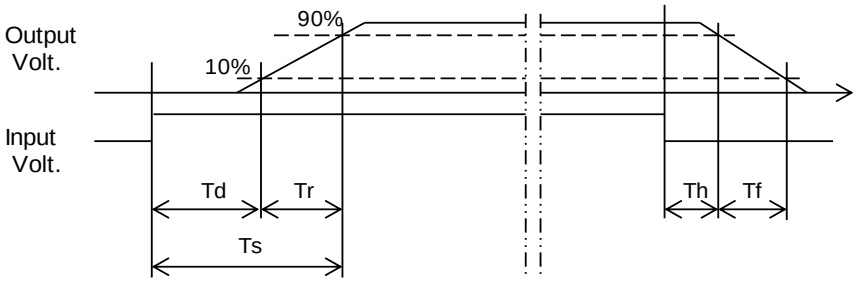

BC-11725

COSEL

Model	STMGFS804805
Item	Overcurrent Protection
Object	+5V16A

Temperature 25°C
Testing Circuitry Figure A

1.Graph

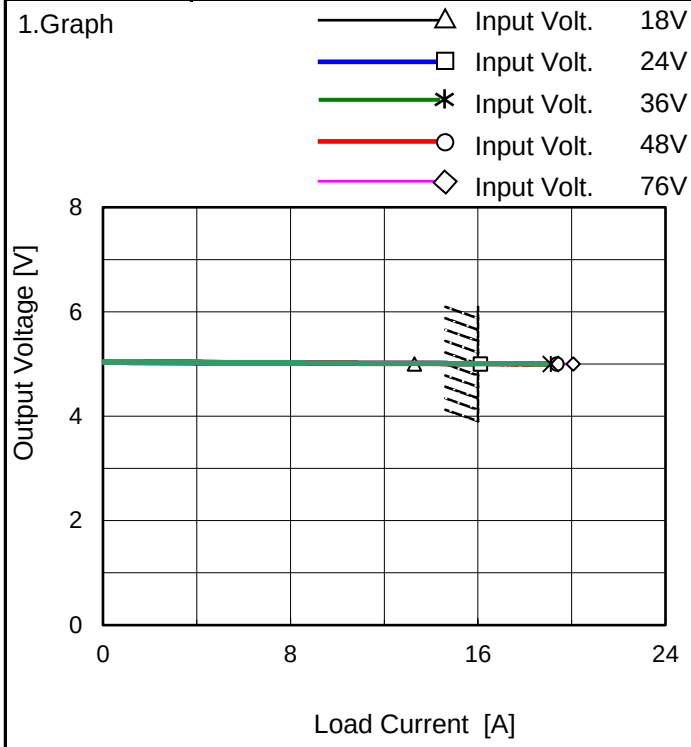

Note: Slanted line shows the range of the rated load current.

Intermittent operation occurs when overcurrent protection is activated.

2.Values

Output Voltage [V]	Load Current [A]				
	Input Volt. 18[V]	Input Volt. 24[V]	Input Volt. 36[V]	Input Volt. 48[V]	Input Volt. 76[V]
5.00	13.291	16.096	19.105	19.368	20.064
4.75	-※1	-※2	-	-	-
4.50	-	-	-	-	-
4.00	-	-	-	-	-
3.50	-	-	-	-	-
3.00	-	-	-	-	-
2.50	-	-	-	-	-
2.00	-	-	-	-	-
1.50	-	-	-	-	-
1.00	-	-	-	-	-
0.50	-	-	-	-	-
0.00	-	-	-	-	-

※1 Maximam output current at minimum input Voltage is 70% of rated load current.
※2 Maximam output current at 24V input Voltage is 80% of rated load current.
Refer to instruction manuals for details of input derating.

BC-11725

COSEL

Model	STMGFS804805
Item	Ambient Temperature Drift
Object	+5V16A

Testing Circuitry Figure A

1.Values

Load 100%

Ambient Temperature[℃]	Output Voltage [V]				
	Input Volt. 18V	Input Volt. 24V	Input Volt. 36V	Input Volt. 48V	Input Volt. 76V
-20	5.002	5.001	4.994	4.994	4.993
25	5.013	5.011	5.004	5.004	5.003
40	5.014	5.012	5.005	5.005	5.003

Note: In case of input Volt.18V, Load 70%. 24V, Load 80%.
Other case Load 100%.

Item	Minimum Input Voltage for Regulated Output Voltage
Object	+5V16A

Testing Circuitry Figure A

1.Values

Ambient Temperature[℃]	Input Voltage [V]	
	Load 50%	Load 70%
-20	15.2	15.2
25	15.3	15.4
40	15.3	15.3

Item	Overvoltage Protection
Object	+5V16A

Testing Circuitry Figure A

1.Values

Load 0%

Ambient Temperature[℃]	Operating Point [V]				
	Input Volt. 18V	Input Volt. 24V	Input Volt. 36V	Input Volt. 48V	Input Volt. 76V
-20	6.21	6.21	6.21	6.22	6.22
25	6.21	6.21	6.21	6.22	6.22
40	6.28	6.28	6.28	6.22	6.22

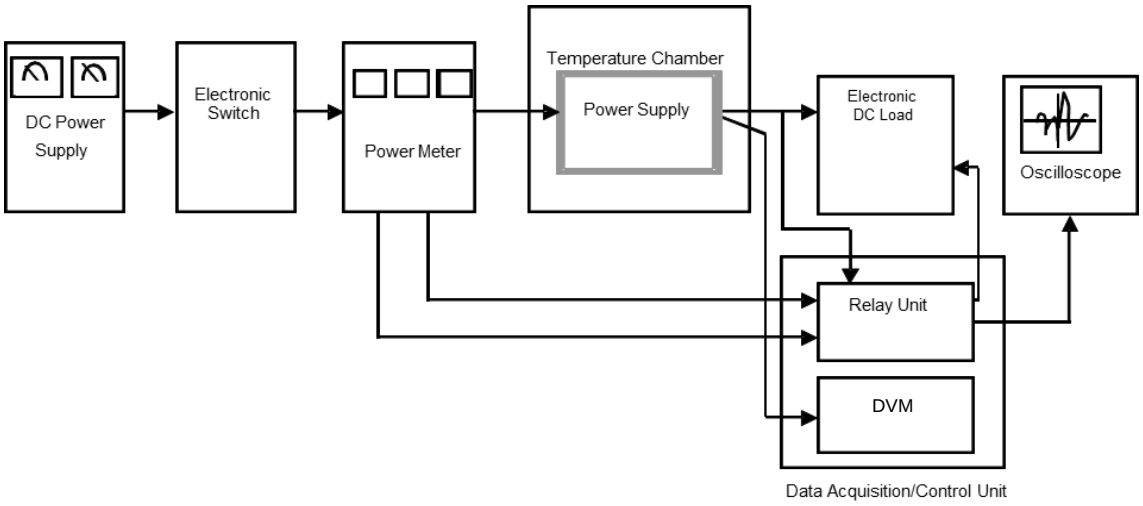

Figure A

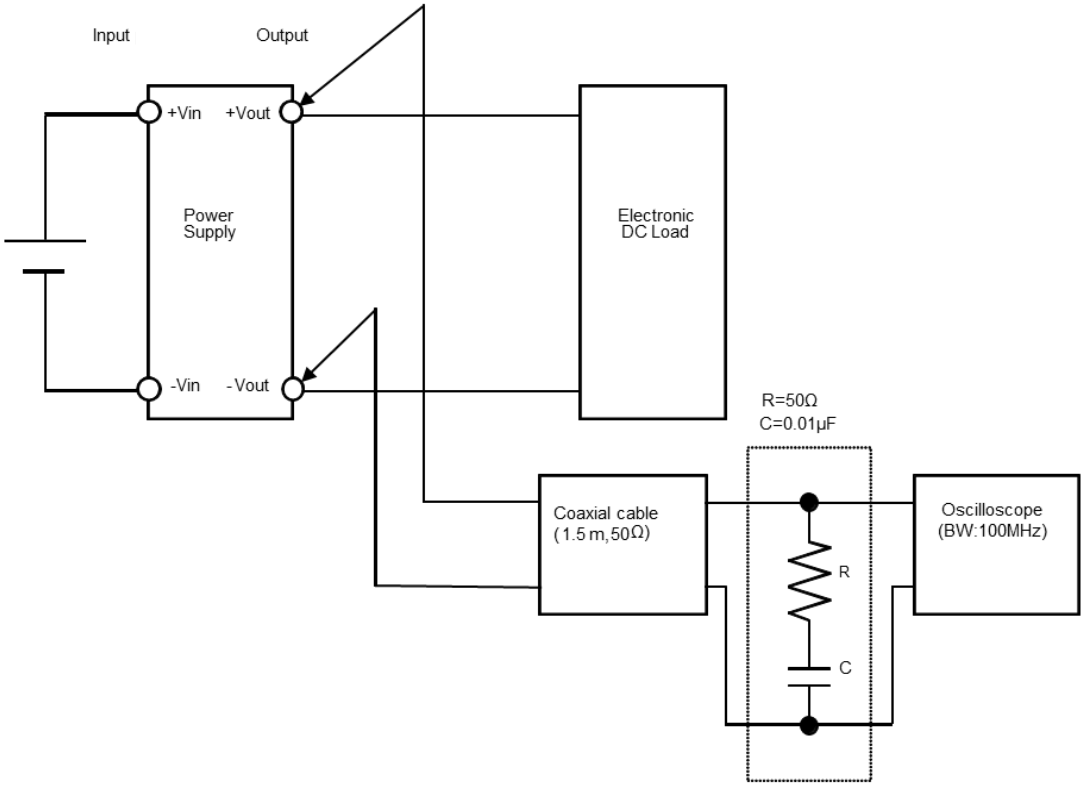

Figure B (Ripple noise Characteristic)