COSEL

参考資料

TEST DATA OF STMGFS80243R3

Regulated DC Power Supply
May 18, 2021

Approved by : Hironobu Shimizu — Design Manager

Prepared by : Hikaru Inagaki — Design Engineer

COSEL CO.,LTD.

参考資料

COSEL

CONTENTS

1.Input Current (by Load Current) ・・・・・・・・・・・・・・・・・・・・・・・・ 1
2.Efficiency (by Load Current) ・・・・・・・・・・・・・・・・・・・・・・・・ 2
3.Line Regulation ・・・・・・・・・・・・・・・・・・・・・・・・・・・・・・・・ 3
4.Load Regulation ・・・・・・・・・・・・・・・・・・・・・・・・・・・・・・・・ 4
5.Ripple-Noise ・・・・・・・・・・・・・・・・・・・・・・・・・・・・・・・・・・ 4
6.Rise and Fall Time ・・・・・・・・・・・・・・・・・・・・・・・・・・・・・・ 5
7.Overcurrent Protection ・・・・・・・・・・・・・・・・・・・・・・・・・・・・ 6
8.Ambient Temperature Drift ・・・・・・・・・・・・・・・・・・・・・・・・・・ 7
9.Minimum Input Voltage for Regulated Output Voltage ・・・・・・・・・・・・ 7
10.Overvoltage Protection ・・・・・・・・・・・・・・・・・・・・・・・・・・・・ 7
11.Figure of Testing Circuitry ・・・・・・・・・・・・・・・・・・・・・・・・・・ 8
(Final Page 8)

COSEL

Model	STMGFS80243R3
Item	Input Current (by Load Current)
Object	――――――――

Temperature 25°C
Testing Circuitry Figure A

1.Graph

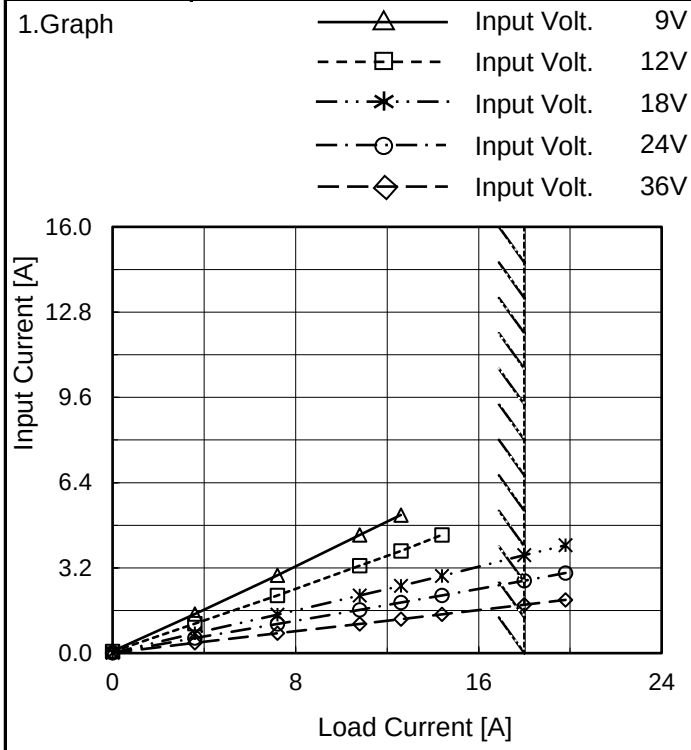

Note: Slanted line shows the range of the rated load current.

2.Values

Load Current [A]	Input Current [A]				
	Input Volt. 9[V]	Input Volt. 12[V]	Input Volt. 18[V]	Input Volt. 24[V]	Input Volt. 36[V]
0.0	0.071	0.057	0.014	0.012	0.012
3.6	1.467	1.105	0.746	0.566	0.387
7.2	2.922	2.171	1.450	1.095	0.742
10.8	4.441	3.283	2.168	1.630	1.096
12.6	5.187	3.835	2.526	1.895	1.272
14.4	- ※1	4.439	2.902	2.171	1.452
18.0	- ※1	- ※2	3.676	2.723	1.819
19.8	- ※1	- ※2	4.049	3.009	2.000
--	-	-	-	-	-
--	-	-	-	-	-
--	-	-	-	-	-

※1 Maximam output current at minimum input Voltage is 70% of rated load current.
※2 Maximam output current at 12V input Voltage is 80% of rated load current.
Refer to instruction manuals for details of input derating.

BC-11724

COSEL

Model	STMGFS80243R3
Item	Efficiency (by Load Current)
Object	――――――――

Temperature 25°C
Testing Circuitry Figure A

1.Graph

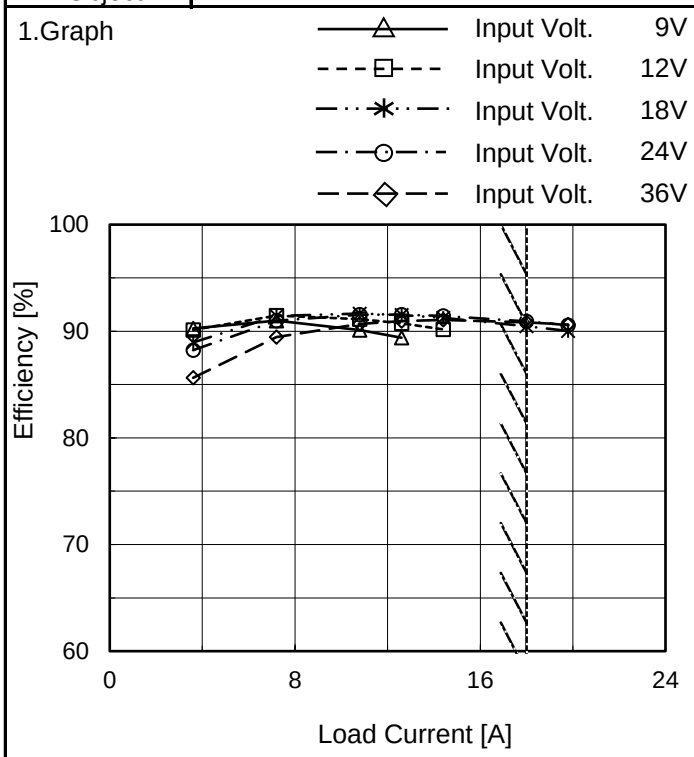

Note: Slanted line shows the range of the rated load current.

2.Values

Load Current [A]	Efficiency [%]				
	Input Volt. 9[V]	Input Volt. 12[V]	Input Volt. 18[V]	Input Volt. 24[V]	Input Volt. 36[V]
0.0	-	-	-	-	-
3.6	90.2	90.1	88.9	88.2	85.6
7.2	91.0	91.5	91.4	91.0	89.4
10.8	90.1	91.1	91.7	91.5	90.7
12.6	89.4	90.8	91.5	91.6	90.9
14.4	- ※1	90.2	91.2	91.4	91.1
18.0	- ※1	- ※2	90.5	90.9	90.8
19.8	- ※1	- ※2	90.0	90.6	90.6
--	-	-	-	-	-
--	-	-	-	-	-
--	-	-	-	-	-

※1 Maximam output current at minimum input Voltage is 70% of rated load current.
※2 Maximam output current at 12V input Voltage is 80% of rated load current.
Refer to instruction manuals for details of input derating.

BC-11724

COSEL

Model	STMGFS80243R3
Item	Line Regulation
Object	+3.3V18A

Temperature 25°C
Testing Circuitry Figure A

1.Graph

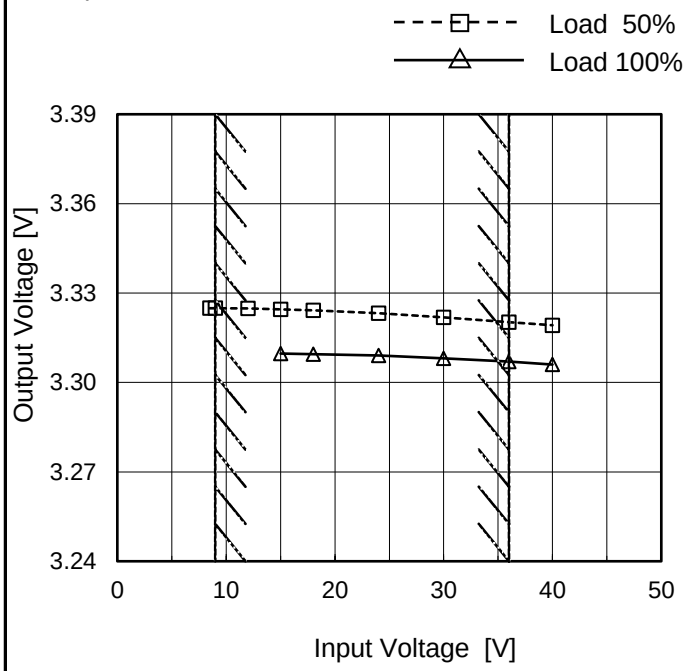

Note: Slanted line shows the range of the rated input voltage.

2.Values

Input Voltage [V]	Output Voltage [V]	
	Load 50%	Load 100%
8.5	3.325	- ※1
9.0	3.325	- ※1
12.0	3.325	- ※2
15.0	3.325	3.310
18.0	3.324	3.310
24.0	3.323	3.309
30.0	3.322	3.308
36.0	3.320	3.307
40.0	3.319	3.306

※1 Maximam output current at minimum input Voltage is 70% of rated load current.
※2 Maximam output current at 12V input Voltage is 80% of rated load current.
Refer to instruction manuals for details of input derating.

BC-11724

COSEL

Model	STMGFS80243R3
Item	Load Regulation
Object	+3.3V18A

Temperature 25°C
Testing Circuitry Figure A

1.Graph

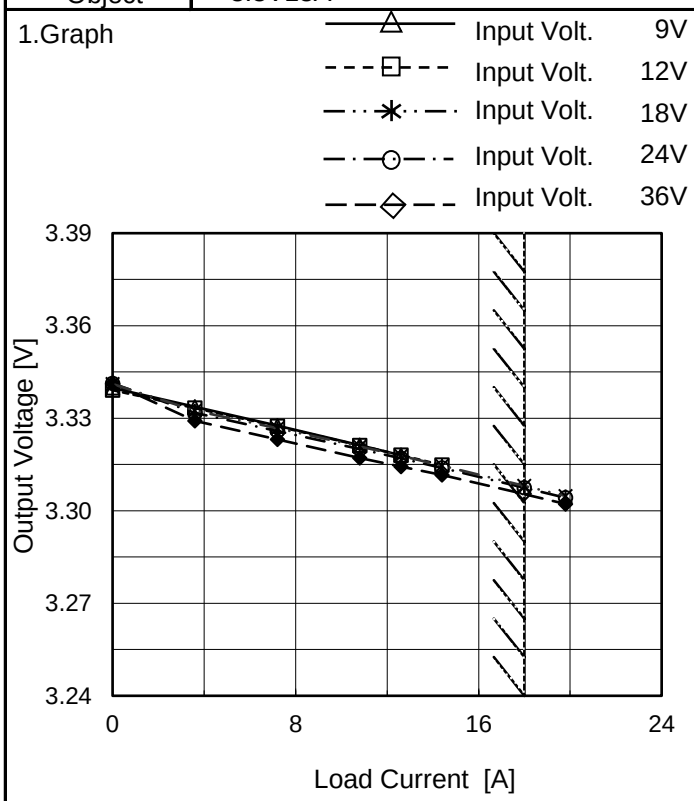

Note: Slanted line shows the range of the rated load current.

2.Values

Load Current [A]	Output Voltage [V] Input Volt. 9[V]	Input Volt. 12[V]	Input Volt. 18[V]	Input Volt. 24[V]	Input Volt. 36[V]
0.0	3.340	3.339	3.341	3.341	3.341
3.6	3.334	3.333	3.333	3.332	3.329
7.2	3.328	3.327	3.327	3.326	3.323
10.8	3.321	3.321	3.321	3.320	3.317
12.6	3.318	3.318	3.318	3.317	3.314
14.4	- ※1	3.315	3.315	3.314	3.312
18.0	- ※1	- ※2	3.308	3.308	3.305
19.8	- ※1	- ※2	3.305	3.304	3.302
--	-	-	-	-	-
--	-	-	-	-	-
--	-	-	-	-	-

※1 Maximam output current at minimum input Voltage is 70% of rated load current.
※2 Maximam output current at 9V input Voltage is 80% of rated load current.
Refer to instruction manuals for details of input derating.

Item	Ripple-Noise
Object	+3.3V18A

Temperature 25°C
Testing Circuitry Figure B

1.Graph

Input Voltage 24V
Load 100%

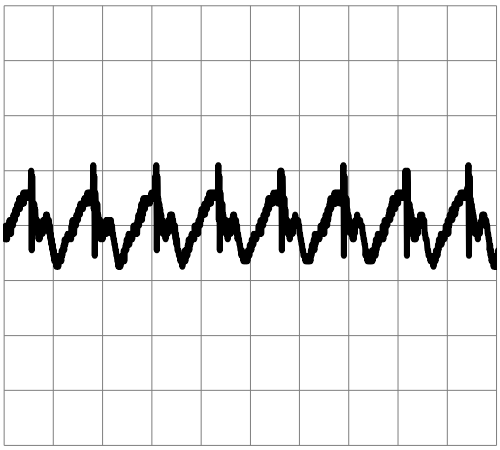

20[mV/div]

5[μs/div]

BC-11724

COSEL

Model	STMGFS80243R3	
Item	Rise and Fall Time	Temperature 25°C Testing Circuitry Figure A
Object	+3.3V18A	

1.Graph

Input Volt. 24 V

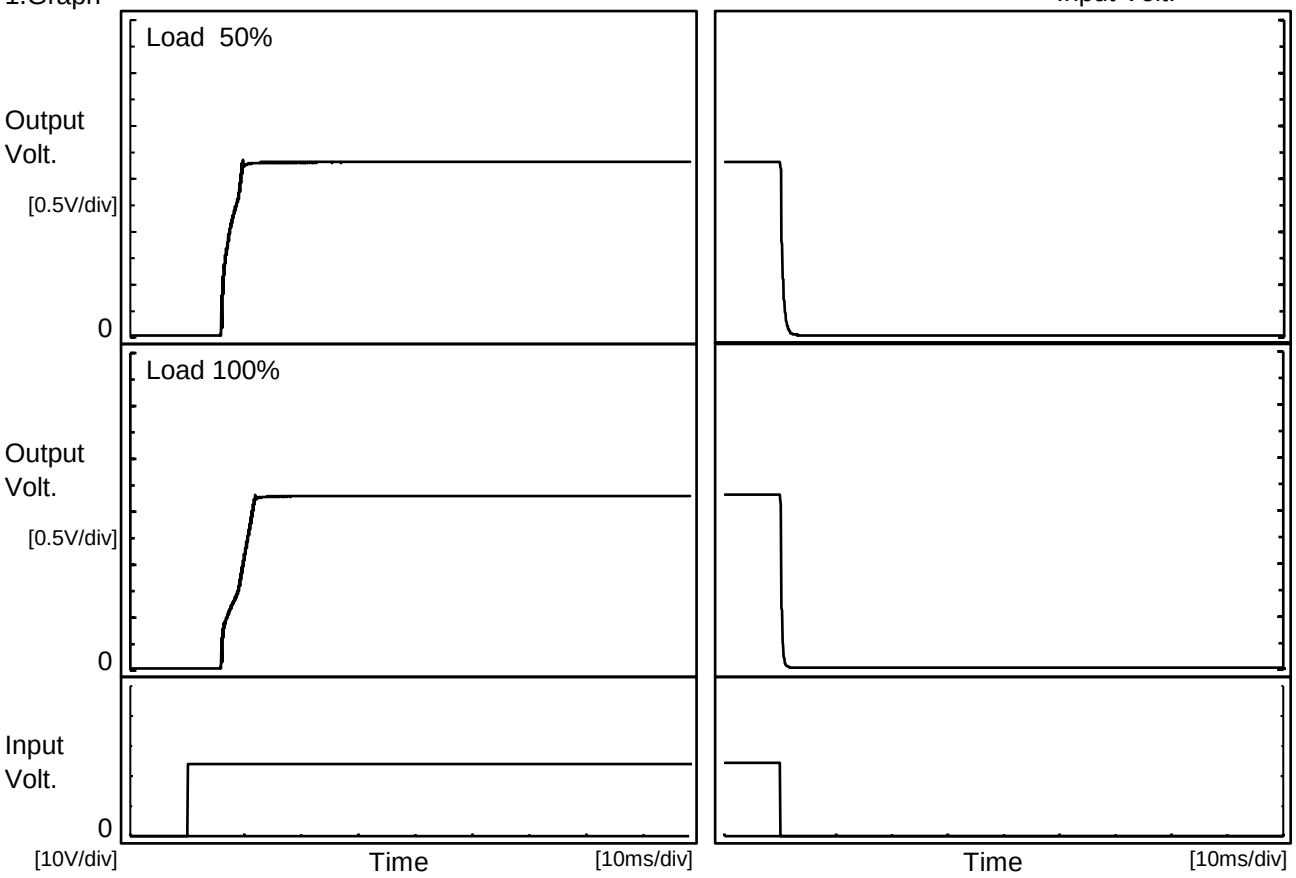

2.Values

[ms]

Load \ Time	Td	Tr	Ts	Th	Tf
50 %	6.1	3.5	9.6	0.2	0.9
100 %	6.0	5.6	11.6	0.2	0.5

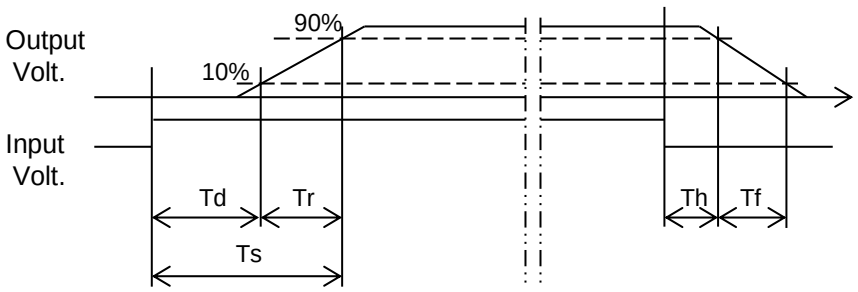

COSEL

Model	STMGFS80243R3
Item	Overcurrent Protection
Object	+3.3V18A

Temperature 25°C
Testing Circuitry Figure A

1.Graph

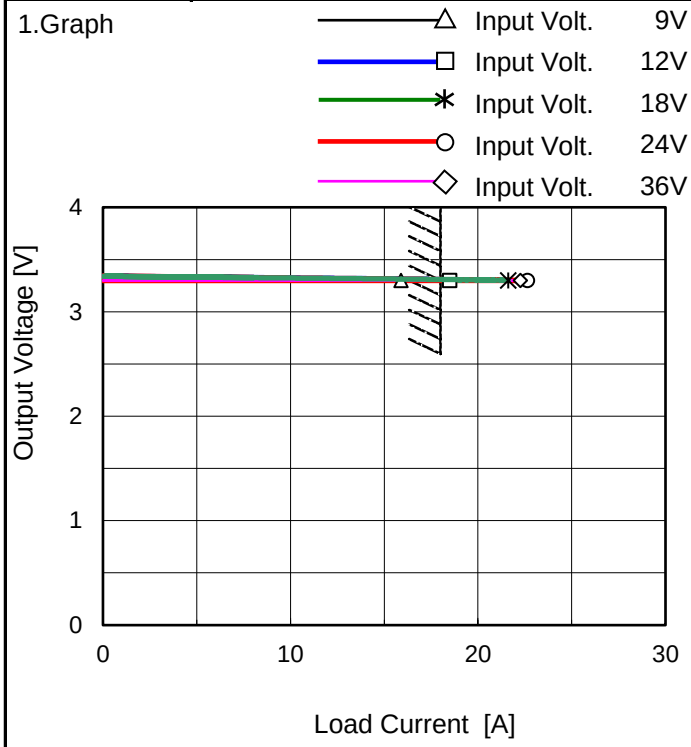

Note: Slanted line shows the range of the rated load current.

Intermittent operation occurs when overcurrent protection is activated.

2.Values

Output Voltage [V]	Load Current [A]				
	Input Volt. 9[V]	Input Volt. 12[V]	Input Volt. 18[V]	Input Volt. 24[V]	Input Volt. 36[V]
3.30	15.888	18.492	21.615	22.640	22.255
3.14	- ※1	- ※2	-	-	-
2.97	-	-	-	-	-
2.64	-	-	-	-	-
2.31	-	-	-	-	-
1.98	-	-	-	-	-
1.65	-	-	-	-	-
1.32	-	-	-	-	-
0.99	-	-	-	-	-
0.66	-	-	-	-	-
0.33	-	-	-	-	-
0.00	-	-	-	-	-

※1 Maximam output current at minimum input Voltage is 70% of rated load current.
※2 Maximam output current at 12V input Voltage is 80% of rated load current.
Refer to instruction manuals for details of input derating.

BC-11724

COSEL

Model	STMGFS80243R3
Item	Ambient Temperature Drift
Object	+3.3V18A

Testing Circuitry Figure A

1.Values

Load 100%

Ambient Temperature[℃]	Output Voltage [V]				
	Input Volt. 9V	Input Volt. 12V	Input Volt. 18V	Input Volt. 24V	Input Volt. 36V
-20	3.318	3.315	3.308	3.307	3.304
25	3.318	3.315	3.309	3.308	3.306
40	3.319	3.316	3.308	3.308	3.306

Note: In case of input Volt.9V, Load 70%. 12V, Load 80%.
Other case Load 100%.

Item	Minimum Input Voltage for Regulated Output Voltage
Object	+3.3V18A

Testing Circuitry Figure A

1.Values

Ambient Temperature[℃]	Input Voltage [V]	
	Load 50%	Load 70%
-20	7.6	7.6
25	7.6	7.6
40	7.6	7.7

Item	Overvoltage Protection
Object	+3.3V18A

Testing Circuitry Figure A

1.Values

Load 0%

Ambient Temperature[℃]	Operating Point [V]				
	Input Volt. 9V	Input Volt. 12V	Input Volt. 18V	Input Volt. 24V	Input Volt. 36V
-20	4.12	4.12	4.12	4.12	4.12
25	4.12	4.12	4.12	4.13	4.13
40	4.12	4.12	4.12	4.13	4.12

COSEL

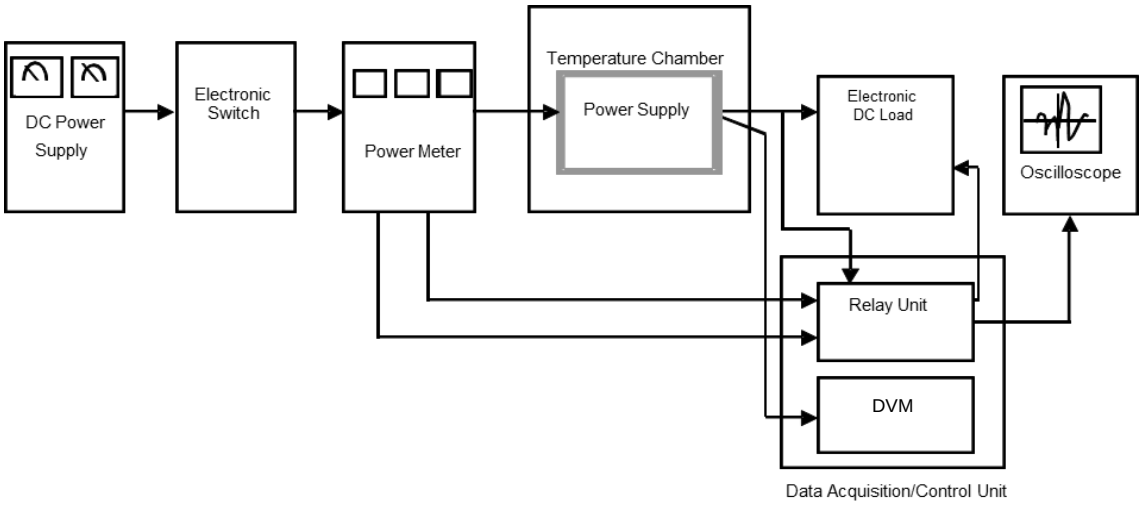

Figure A

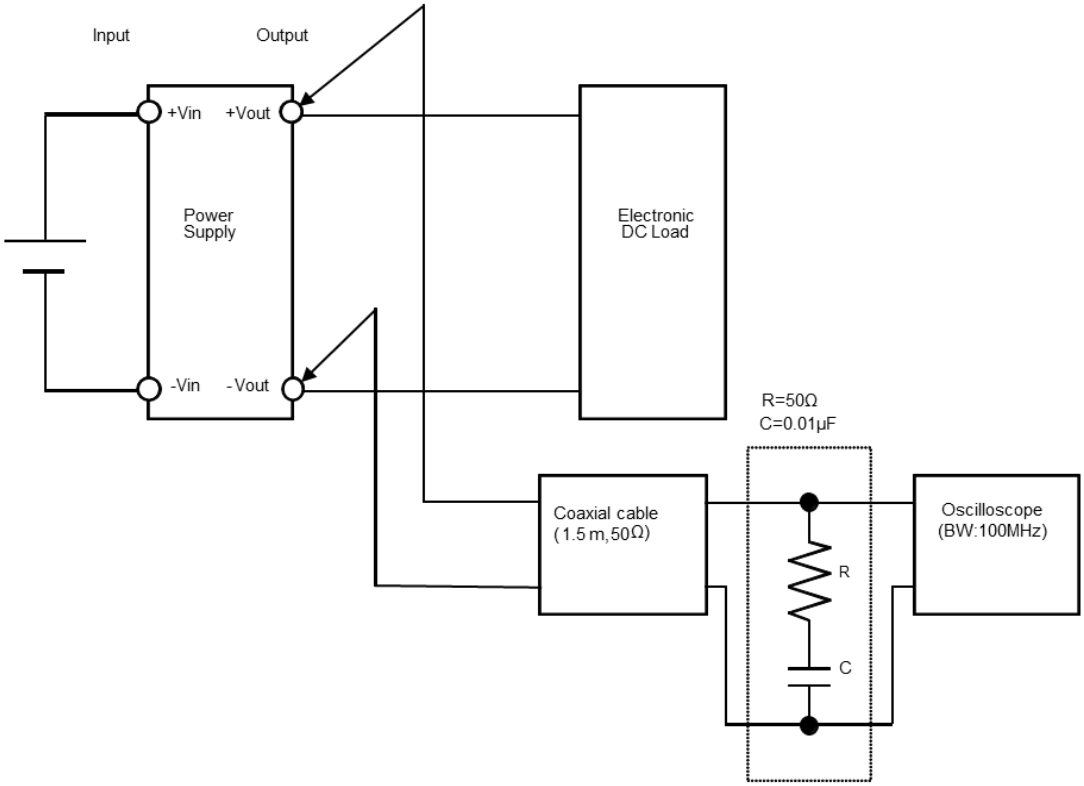

Figure B (Ripple noise Characteristic)