参考資料

TEST DATA OF PCA300F-15

Regulated DC Power Supply
March 11, 2019

Approved by : Koji Todo
Koji Todo Design Manager

Prepared by : Yuya Takeda
Yuya Takeda Design Engineer

COSEL CO.,LTD.

参考資料

COSEL

CONTENTS

1.Input Current (by Load Current) ・・・・・・・・・・・・・・・・・・・・・・・・・ 1
2.Efficiency (by Load Current) ・・・・・・・・・・・・・・・・・・・・・・・・・ 2
3.Power Factor (by Load Current) ・・・・・・・・・・・・・・・・・・・・・・・・・ 3
4.Inrush Current ・・・・・・・・・・・・・・・・・・・・・・・・・・・・・・・・・ 4
5.Leakage Current ・・・・・・・・・・・・・・・・・・・・・・・・・・・・・・・・・ 5
6.Line Regulation ・・・・・・・・・・・・・・・・・・・・・・・・・・・・・・・・・ 6
7.Load Regulation ・・・・・・・・・・・・・・・・・・・・・・・・・・・・・・・・・ 7
8.Ripple-Noise ・・・・・・・・・・・・・・・・・・・・・・・・・・・・・・・・・・ 7
9.Dynamic Load Response ・・・・・・・・・・・・・・・・・・・・・・・・・・・・・ 8
10.Rise and Fall Time ・・・・・・・・・・・・・・・・・・・・・・・・・・・・・・・ 9
11.Hold-Up Time ・・・・・・・・・・・・・・・・・・・・・・・・・・・・・・・・・・ 10
12.Instantaneous Interruption Compensation ・・・・・・・・・・・・・・・・・・・・ 11
13.Overcurrent Protection ・・・・・・・・・・・・・・・・・・・・・・・・・・・・・ 12
14.Ambient Temperature Drift ・・・・・・・・・・・・・・・・・・・・・・・・・・・ 13
15.Minimum Input Voltage for Regulated Output Voltage ・・・・・・・・・・・・・ 13
16.Overvoltage Protection ・・・・・・・・・・・・・・・・・・・・・・・・・・・・・ 13
17.Figure of Testing Circuitry ・・・・・・・・・・・・・・・・・・・・・・・・・・・ 14
(Final Page 15)

COSEL

Model	PCA300F-15
Item	Input Current (by Load Current)
Object	――――――

Temperature 25°C
Testing Circuitry Figure A

1.Graph

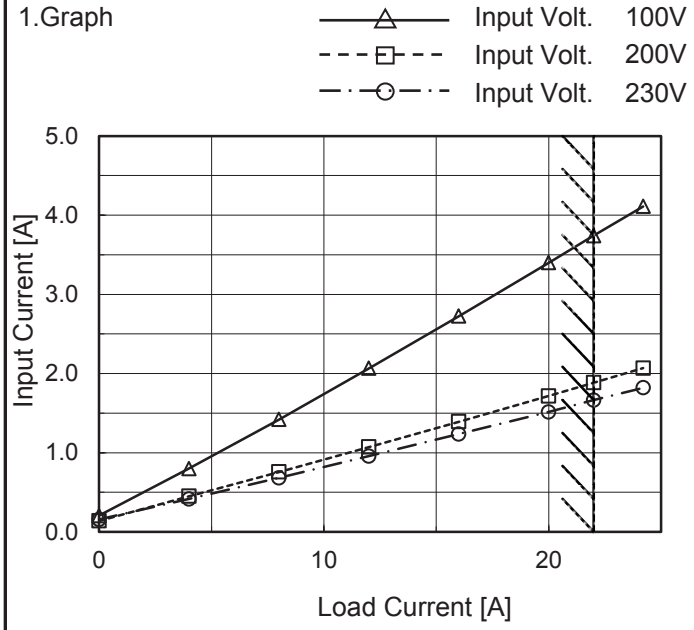

Note: Slanted line shows the range of the rated load current.

2.Values

Load Current [A]	Input Current [A]		
	Input Volt. 100[V]	Input Volt. 200[V]	Input Volt. 230[V]
0.0	0.204	0.139	0.158
4.0	0.800	0.449	0.416
8.0	1.419	0.756	0.682
12.0	2.066	1.072	0.956
16.0	2.724	1.391	1.235
20.0	3.399	1.716	1.515
22.0	3.740	1.883	1.663
24.2	4.110	2.068	1.820
--	-	-	-
--	-	-	-
--	-	-	-

BC-11344

COSEL

Model	PCA300F-15
Item	Efficiency (by Load Current)
Object	————————

Temperature 25°C
Testing Circuitry Figure A

1.Graph

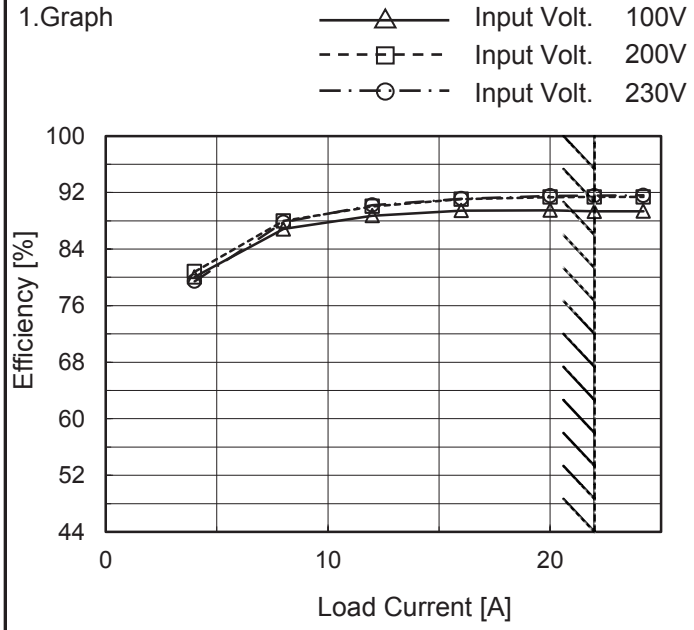

Note: Slanted line shows the range of the rated load current.

2.Values

Load Current [A]	Efficiency [%]		
	Input Volt. 100[V]	Input Volt. 200[V]	Input Volt. 230[V]
0.0	-	-	-
4.0	80.1	80.8	79.4
8.0	86.8	88.0	87.8
12.0	88.7	90.0	90.2
16.0	89.4	91.1	91.1
20.0	89.5	91.3	91.5
22.0	89.3	91.4	91.5
24.2	89.3	91.4	91.6
--	-	-	-
--	-	-	-
--	-	-	-

BC-11344

COSEL

Model	PCA300F-15
Item	Power Factor (by Load Current)
Object	――――――

Temperature 25°C
Testing Circuitry Figure A

1.Graph

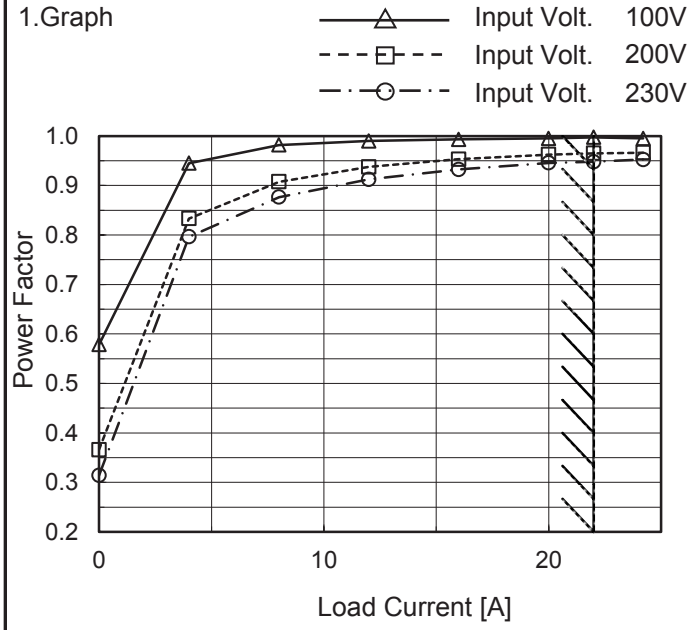

Note: Slanted line shows the range of the rated load current.

2.Values

Load Current [A]	Power Factor		
	Input Volt. 100[V]	Input Volt. 200[V]	Input Volt. 230[V]
0.0	0.578	0.366	0.314
4.0	0.945	0.833	0.796
8.0	0.982	0.908	0.877
12.0	0.990	0.938	0.912
16.0	0.993	0.953	0.932
20.0	0.995	0.962	0.946
22.0	0.997	0.965	0.948
24.2	0.995	0.966	0.952
--	-	-	-
--	-	-	-
--	-	-	-

BC-11344

COSEL

Model	PCA300F-15	
Item	Inrush Current	Temperature 25°C Testing Circuitry Figure A
Object	————————	

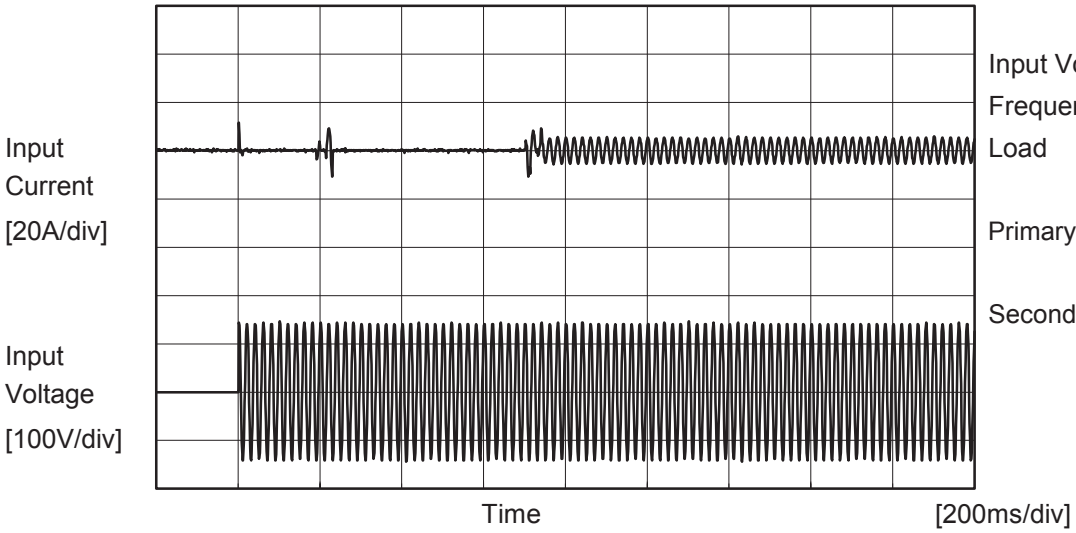

Input Voltage 100 V
Frequency 50 Hz
Load 100 %

Primary inrush current : 11.8 A
Secondary inrush current : 10.7 A

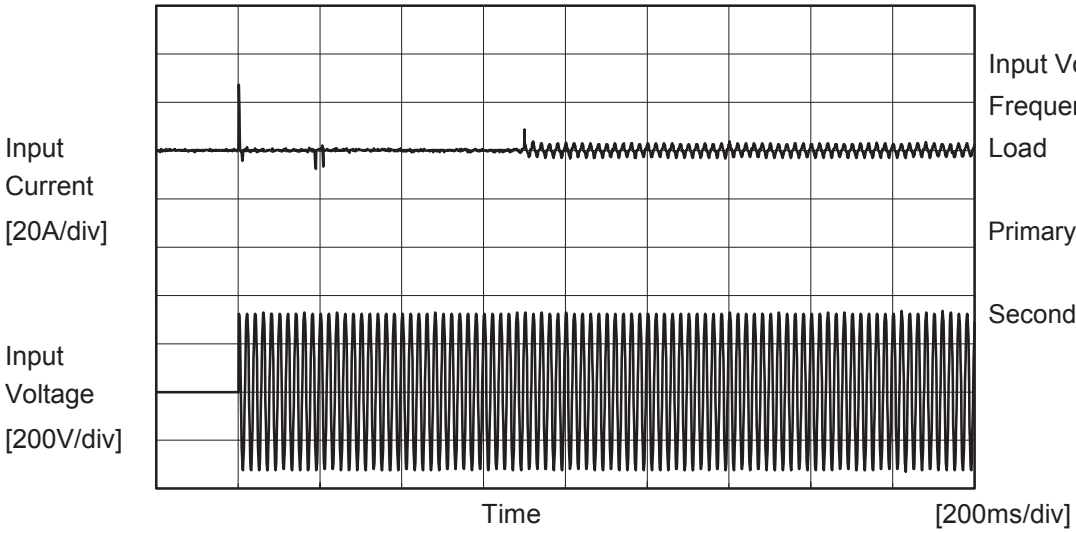

Input Voltage 230 V
Frequency 50 Hz
Load 100 %

Primary inrush current : 27.3 A
Secondary inrush current : 8.7 A

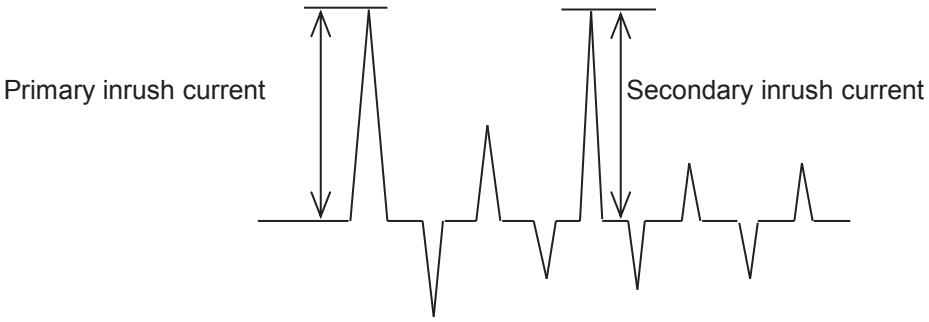

COSEL

Model	PCA300F-15	
Item	Leakage Current	Temperature 25°C Testing Circuitry Figure B
Object	――――――――――	

1.Results

[mA]

Standards	Testing Circuitry	Measuring Method	Input Volt.			Note
			100 [V]	230 [V]	240 [V]	
DEN-AN	Figure B-1	Both phases	0.13	0.30	0.31	Operation
		One of phases	0.24	0.55	0.58	Stand by
IEC62368-1	Figure B-2	Both phases	0.13	0.29	0.31	Operation
		One of phases	0.22	0.54	0.57	Stand by
	Figure B-3	Both phases	0.13	0.29	0.30	Operation
		One of phases	0.24	0.54	0.56	Stand by
IEC60601-1	Figure B-4	Both phases	0.12	0.30	0.31	Operation
		One of phases	0.24	0.55	0.58	Stand by

The value for "One of phases" is the reference value only.

2.Condition

Leakage current value is concluded after measuring both phases of AC input and by choosing the larger one.

COSEL

Model	PCA300F-15
Item	Line Regulation
Object	+15V22A

Temperature 25°C
Testing Circuitry Figure A

1.Graph

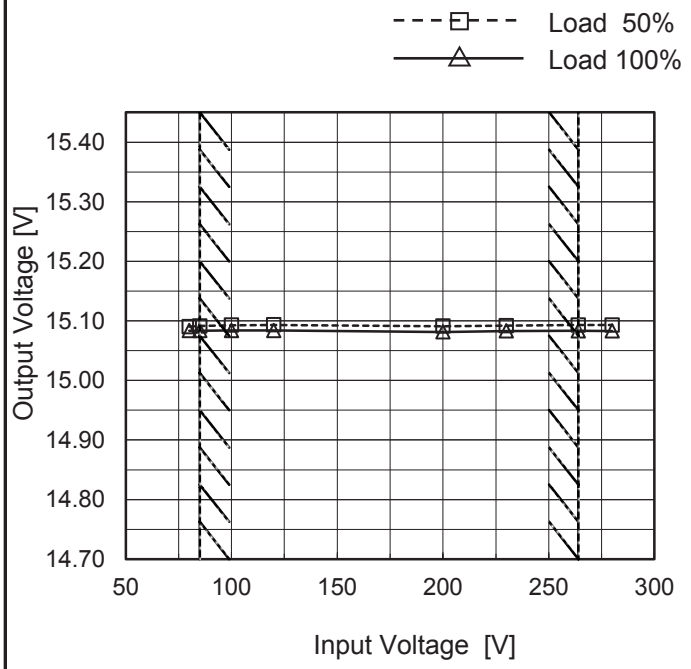

Note: Slanted line shows the range of the rated input voltage.

2.Values

Input Voltage [V]	Output Voltage [V]	
	Load 50%	Load 100%
80	15.090	-
85	15.091	15.084
100	15.093	15.084
120	15.093	15.084
200	15.091	15.082
230	15.092	15.083
264	15.093	15.083
280	15.093	15.083
--	-	-

BC-11344

COSEL

Model	PCA300F-15
Item	Load Regulation
Object	+15V22A

Temperature 25°C
Testing Circuitry Figure A

1.Graph

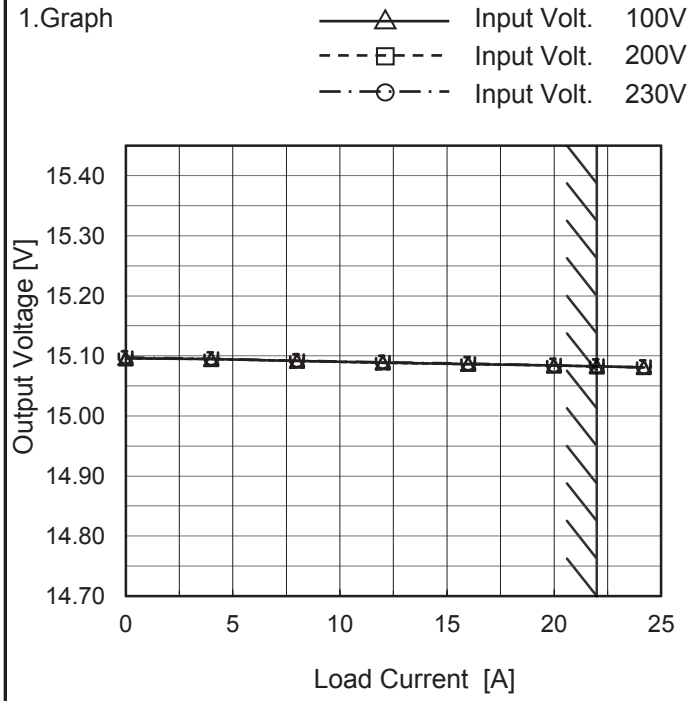

Note: Slanted line shows the range of the rated load current.

2.Values

Load Current [A]	Output Voltage [V]		
	Input Volt. 100[V]	Input Volt. 200[V]	Input Volt. 230[V]
0.0	15.096	15.096	15.098
4.0	15.095	15.095	15.096
8.0	15.092	15.092	15.092
12.0	15.089	15.089	15.090
16.0	15.086	15.087	15.087
20.0	15.084	15.084	15.084
22.0	15.083	15.083	15.083
24.2	15.081	15.081	15.081
--	-	-	-
--	-	-	-
--	-	-	-

Item	Ripple-Noise
Object	+15V22A

Temperature 25°C
Testing Circuitry Figure C

1.Graph

Input Voltage 200V
Load 100%

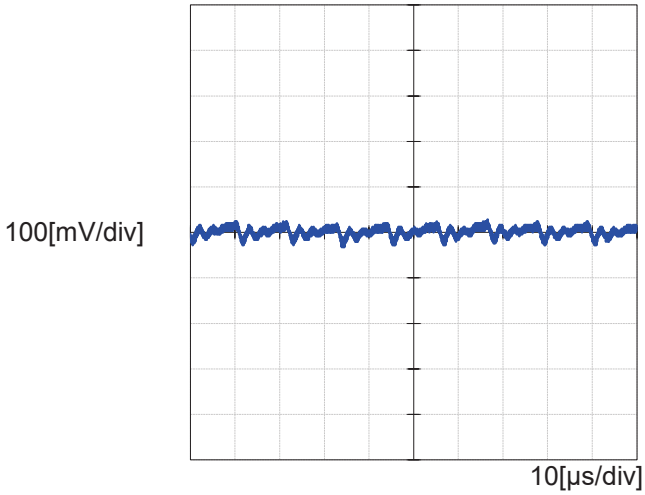

BC-11344

COSEL

Model	PCA300F-15		
Item	Dynamic Load Response	Temperature	25°C
		Testing Circuitry	Figure A
Object	+15V22A		

Input Volt. 200 V
Cycle 1000 ms

Min.Load (0A)←→
Load 100% (22A)

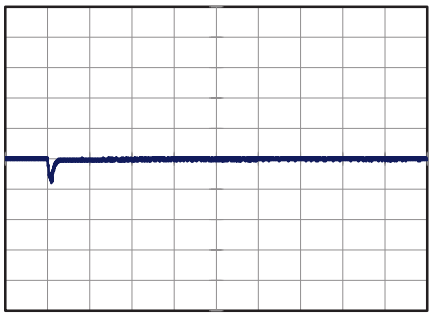

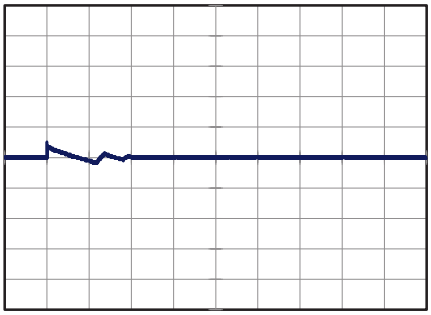

1 V/div

2 ms/div

20 ms/div

Min.Load (0A)←→
Load 50% (11A)

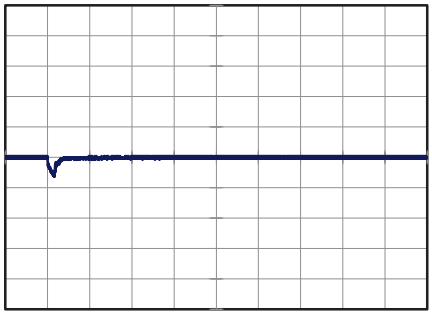

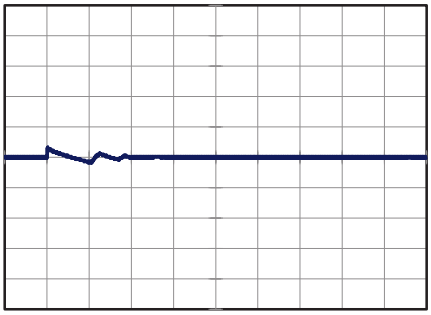

1 V/div

2 ms/div

20 ms/div

COSEL

Model	PCA300F-15	
Item	Rise and Fall Time	Temperature 25°C Testing Circuitry Figure A
Object	+15V22A	

1.Graph

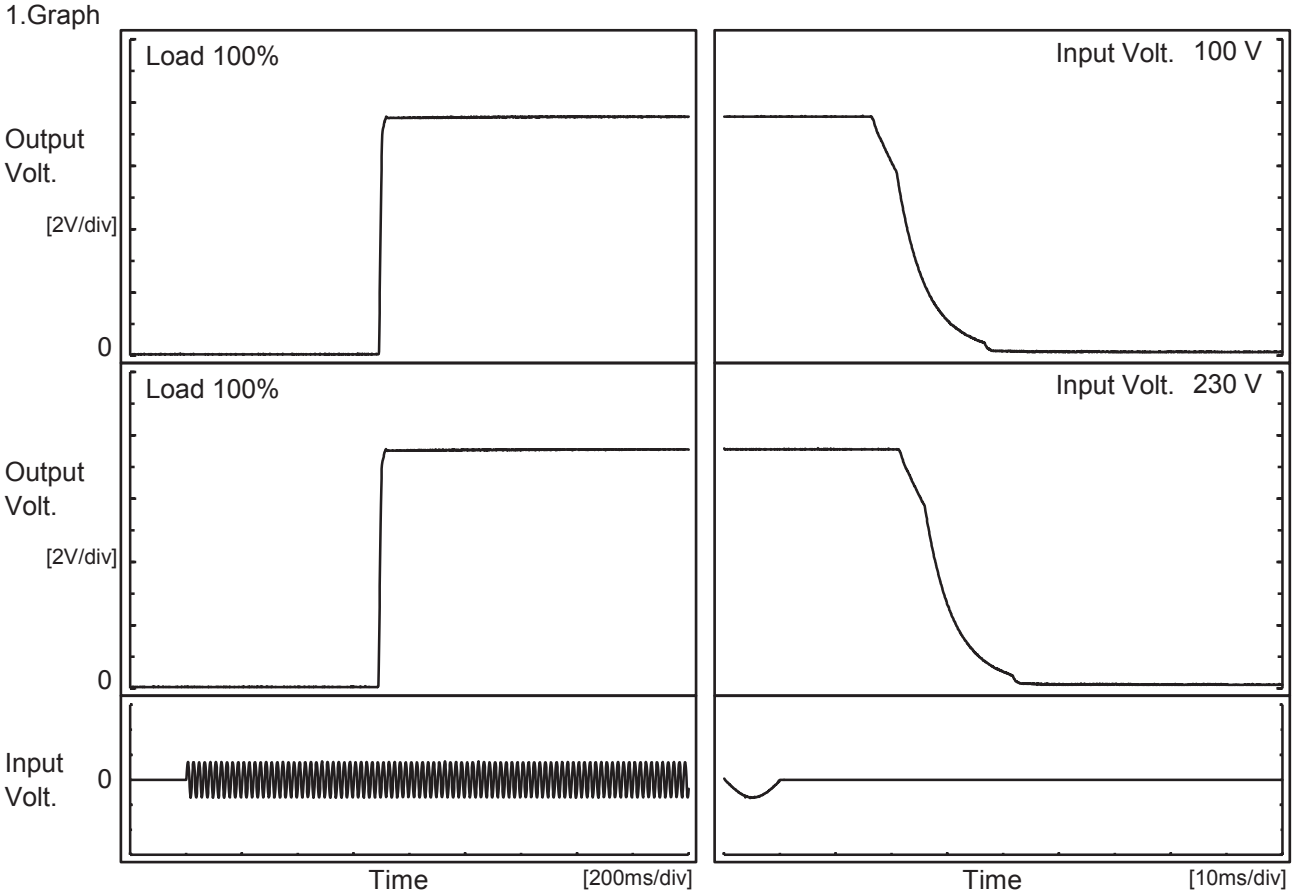

2.Values

[ms]

Input Volt. \ Time	Td	Tr	Ts	Th	Tf
100 V	693.0	10.0	703.0	18.2	14.1
230 V	691.0	10.0	701.0	23.1	14.2

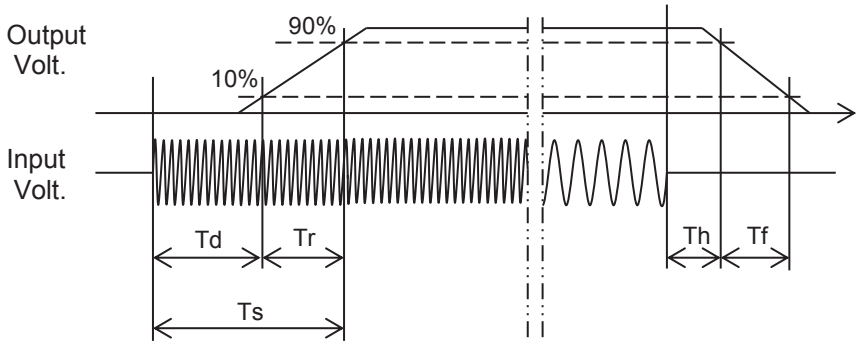

BC-11344

COSEL

Model	PCA300F-15
Item	Hold-Up Time
Object	+15V22A

Temperature 25°C
Testing Circuitry Figure A

1.Graph

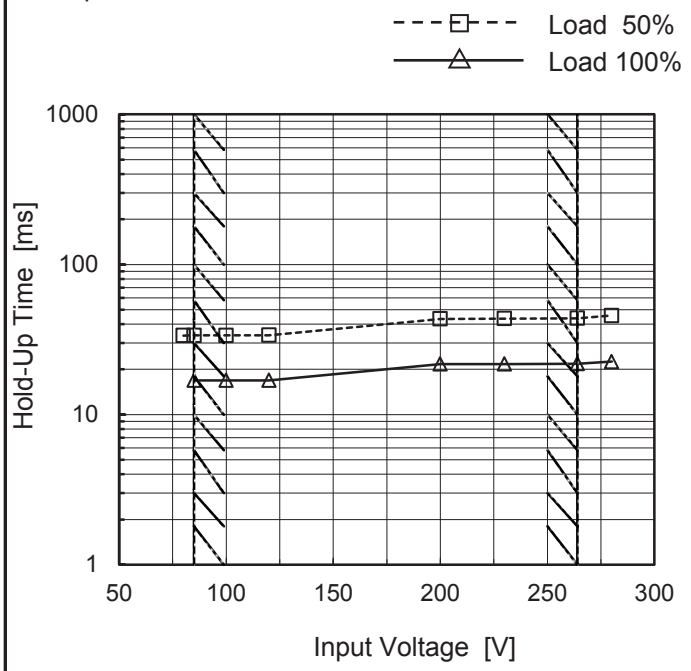

This duration covers from Shut-off of input voltage to the moment when output voltage descends to the rated range of voltage accuracy.
Note: Slanted line shows the range of the rated input voltage.

2.Values

Input Voltage [V]	Hold-Up Time [ms]	
	Load 50%	Load 100%
80	34	-
85	34	17
100	34	17
120	34	17
200	43	22
230	44	22
264	44	22
280	46	23
--	-	-

BC-11344

COSEL

Model	PCA300F-15
Item	Instantaneous Interruption Compensation
Object	+15V22A

Temperature 25°C
Testing Circuitry Figure A

1.Graph

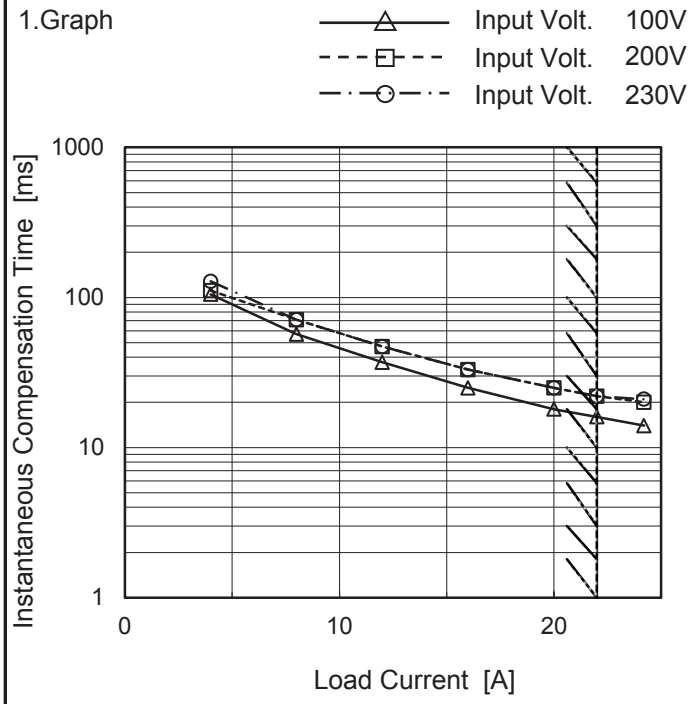

Note: Slanted line shows the range of the rated load current.

2.Values

Load Current [A]	Time [ms]		
	Input Volt. 100[V]	Input Volt. 200[V]	Input Volt. 230[V]
0.0	-	-	-
4.0	105	111	128
8.0	57	71	71
12.0	37	47	47
16.0	25	33	33
20.0	18	25	25
22.0	16	22	22
24.2	14	20	21
--	-	-	-
--	-	-	-
--	-	-	-

BC-11344

COSEL

Model	PCA300F-15
Item	Overcurrent Protection
Object	+15V22A

Temperature 25°C
Testing Circuitry Figure A

1.Graph

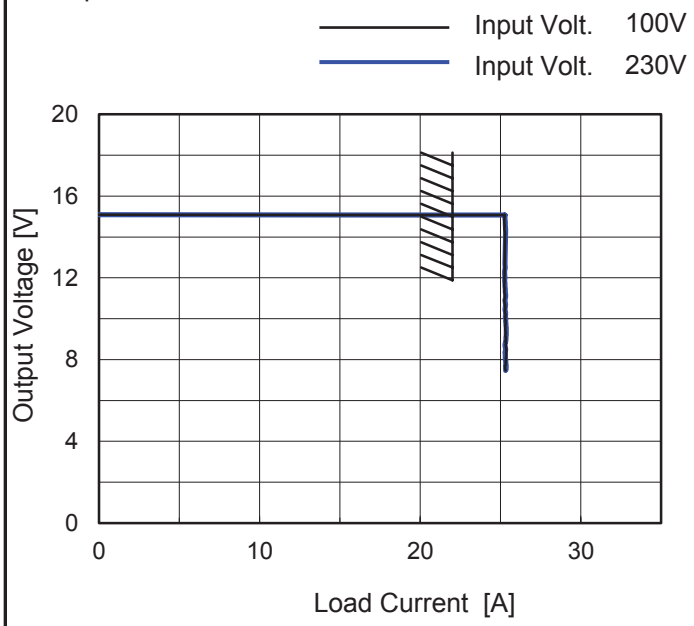

Note: Slanted line shows the range of the rated load current.

Hiccup mode activates when the output voltage is from 7.5V to 0V.

2.Values

Output Voltage [V]	Load Current [A]	
	Input Volt. 100[V]	Input Volt. 230[V]
14.25	25.28	25.31
13.50	25.25	25.28
12.00	25.24	25.28
10.50	25.29	25.29
9.00	25.34	25.34
7.50	25.32	25.32
--	-	-
--	-	-
--	-	-
--	-	-
--	-	-
--	-	-

COSEL

Model	PCA300F-15
Item	Ambient Temperature Drift
Object	+15V22A

Testing Circuitry Figure A

1.Values

Load 100%

Ambient Temperature[℃]	Output Voltage [V]		
	Input Volt. 100V	Input Volt. 200V	Input Volt. 230V
-20	15.038	15.038	15.038
25	15.087	15.087	15.087
50	15.124	15.124	15.125

Item	Minimum Input Voltage for Regulated Output Voltage
Object	+15V22A

Testing Circuitry Figure A

1.Values

Ambient Temperature[℃]	Input Voltage [V]	
	Load 50%	Load 100%
-20	73	80
25	73	80
50	74	80

Item	Overvoltage Protection
Object	+15V22A

Testing Circuitry Figure A

1.Values

Load 0%

Ambient Temperature[℃]	Operating Point [V]	
	Input Volt. 100V	Input Volt. 230V
-20	19.17	19.18
25	19.25	19.24
50	19.25	19.25

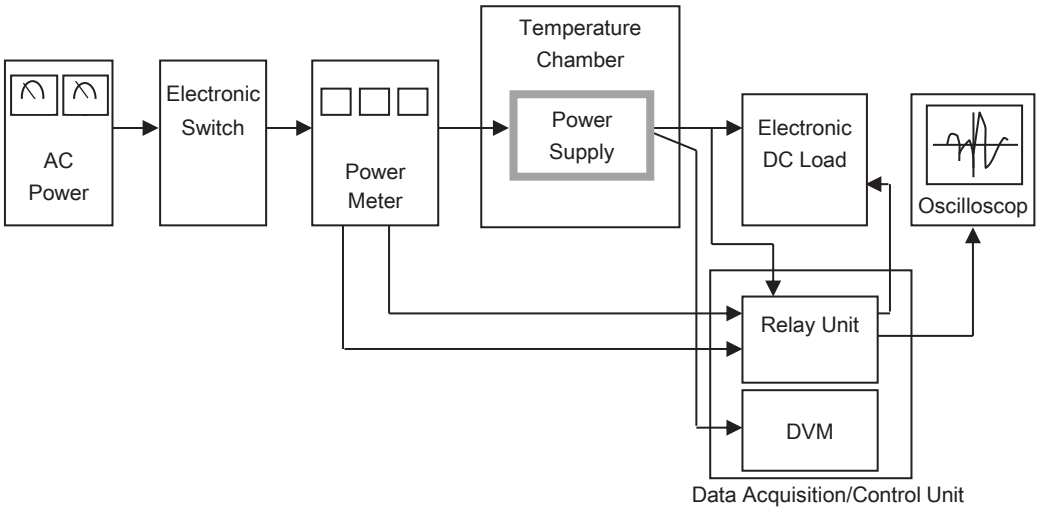

Figure A

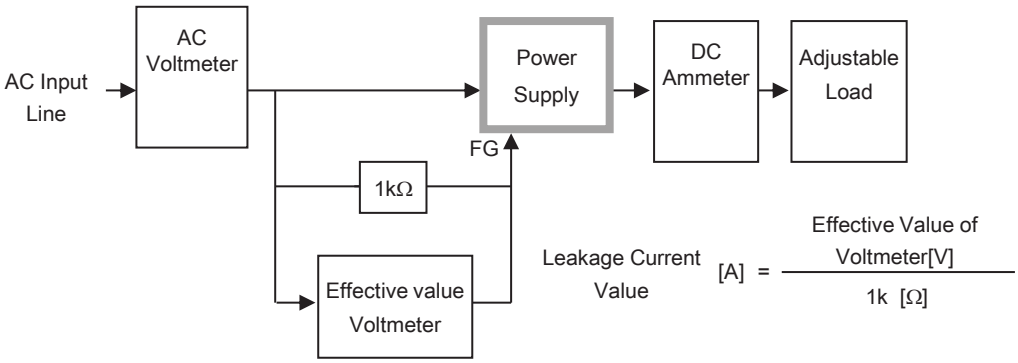

Figure B-1 (DEN-AN)

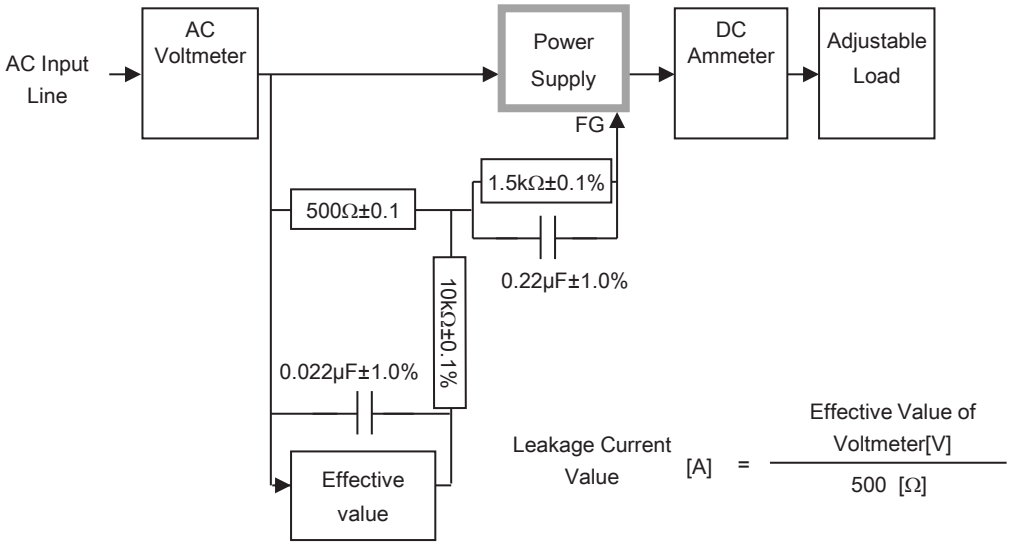

Figure B-2 (IEC62368-1 refer to IEC60990 Fig.4)

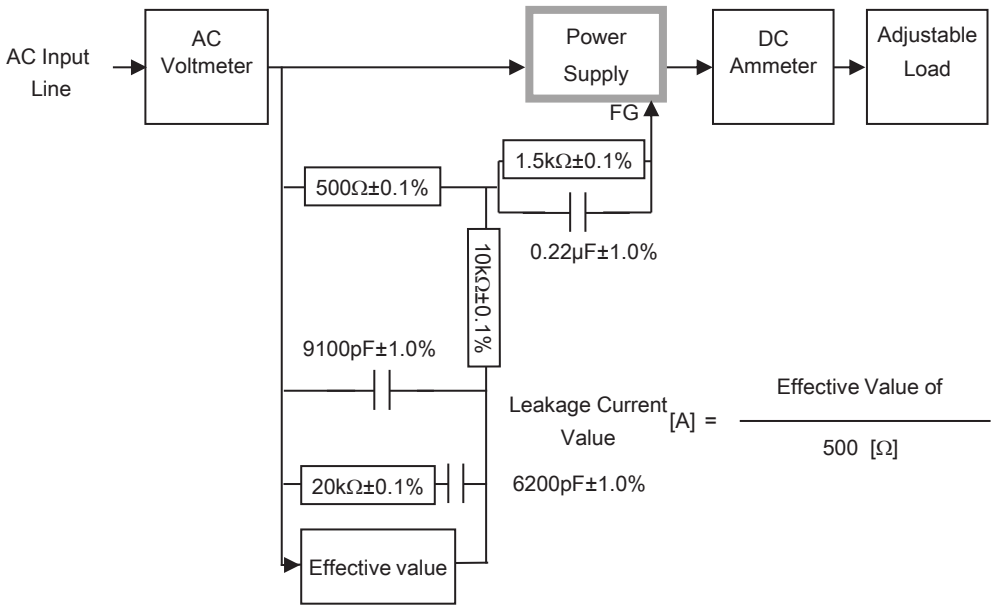

Figure B-3 (IEC62368-1 refer to IEC60990 Fig.5)

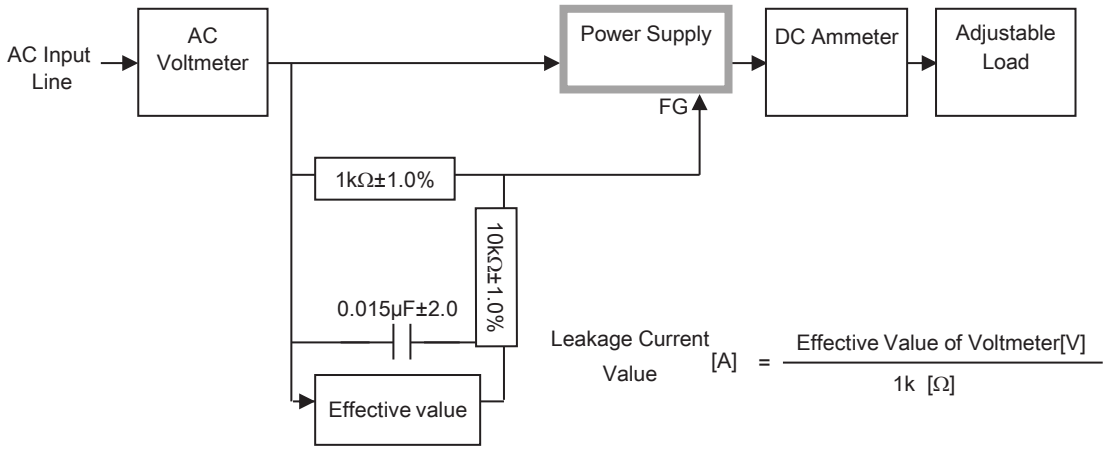

Figure B-4 (IEC60601-1)

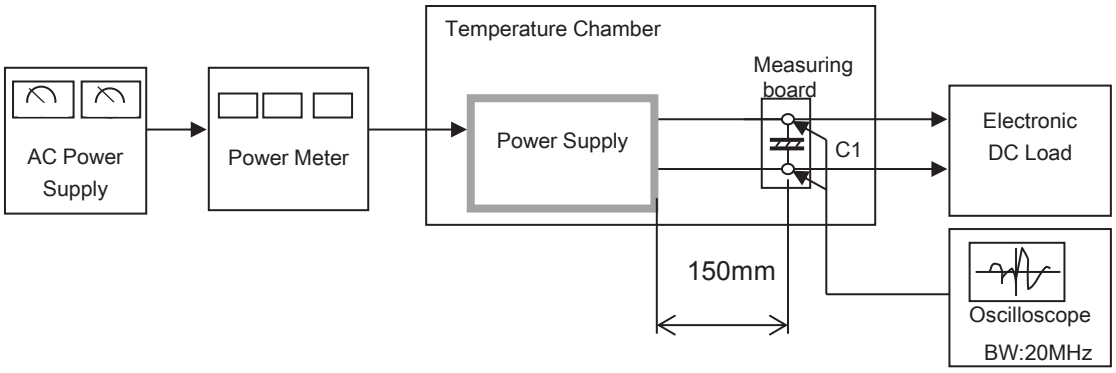

C1= 22 μF
(Electrolytic capacitor)

Figure C