参考資料

COSEL

TEST DATA OF LDA75F-24
(100V INPUT)

Regulated DC Power Supply

Date : Aug. 20. 1999

Approved by : H. Yamaguchi
Design Manager

Prepared by : J. Asano
Design Engineer

コーセル株式会社

COSEL CO., LTD.

COSEL

CONTENTS

1. Line Regulation ・・・・・・・・・・・・・・・・・・・・ 1
静的入力変動
2. Input Current (by Load Current) ・・・・・・・・・・・ 2
入力電流（負荷特性）
3. Input Power (by Load Current) ・・・・・・・・・・・・ 3
入力電力（負荷特性）
4. Efficiency (by Input Voltage) ・・・・・・・・・・・・ 4
効率（入力電圧特性）
5. Efficiency (by Load Current)・・・・・・・・・・・・・ 5
効率（負荷特性）
6. Hold-Up Time・・・・・・・・・・・・・・・・・・・・・ 6
出力保持時間
7. Instantaneous Interruption Compensation ・・・・・・ 7
瞬時停電保障
8. Load Regulation ・・・・・・・・・・・・・・・・・・・ 8
静的負荷変動
9. Ripple Voltage (by Load Current)・・・・・・・・・・・ 9
リップル電圧（負荷特性）
10. Ripple-Noise・・・・・・・・・・・・・・・・・・・・・ 10
リップルノイズ
11. Overcurrent Protection・・・・・・・・・・・・・・・・ 11
過電流保護
12. Overvoltage Protection・・・・・・・・・・・・・・・・ 12
過電圧保護
13. Inrush Current・・・・・・・・・・・・・・・・・・・・ 13
突入電流
14. Dynamic Load Responce ・・・・・・・・・・・・・・・・ 14
動的負荷変動
15. Rise and Fall Time・・・・・・・・・・・・・・・・・・ 15
立上り、立下がり時間
16. Ambient Temperature Drift ・・・・・・・・・・・・・・ 16
周囲温度変動
17. Minimum Input Voltage for Regulated Output Voltage・ 17
最低レギュレーション電圧
18. Ripple Voltage (by Ambient Temperature) ・・・・・・ 18
リップル電圧（周囲温度特性）
19. Time Lapse Drift・・・・・・・・・・・・・・・・・・・ 19
経時ドリフト
20. Output Voltage Accuracy ・・・・・・・・・・・・・・・ 20
定電圧精度
21. Condensation・・・・・・・・・・・・・・・・・・・・・ 21
結露特性
22. Leakage Current ・・・・・・・・・・・・・・・・・・・ 22
漏洩電流
23. Line Noise Tolerance・・・・・・・・・・・・・・・・・ 23
入力雑音耐量
24. Conducted Emission・・・・・・・・・・・・・・・・・・ 24
雑音端子電圧
25. Figure of Testing Circuitry ・・・・・・・・・・・・・ 25
測定回路図

(Final Page 26)

COSEL

Model	LDA75F-24
Item	Line Regulation 静的入力変動
Object	+24.0V3.2A

Temperature 25℃
Testing Circuitry Figure A

1. Graph

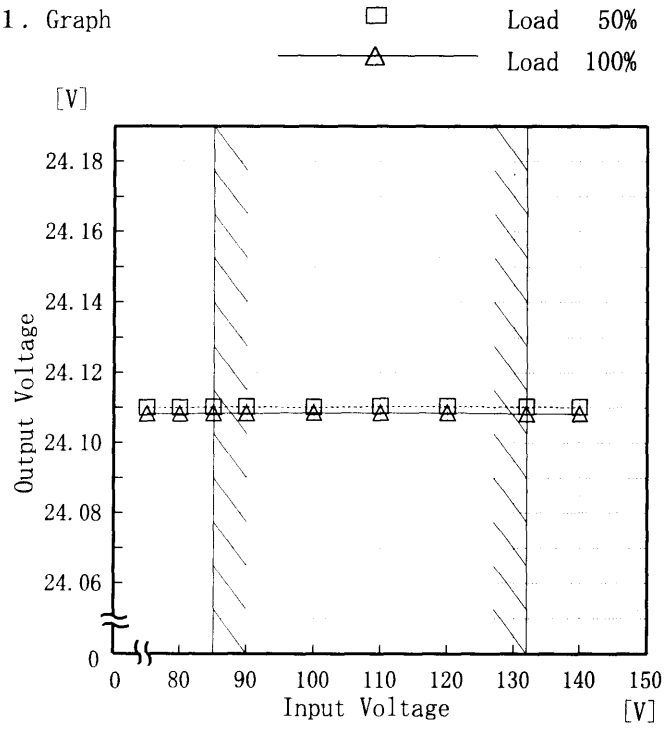

Note: Slanted line shows the range of the rated input voltage.

(注)斜線は定格入力電圧範囲を示す。

2. Values

Input Voltage [V]	Output Voltage [V]	
	Load 50%	Load 100%
75	24.110	24.108
80	24.110	24.108
85	24.110	24.108
90	24.110	24.108
100	24.110	24.109
110	24.110	24.109
120	24.110	24.108
132	24.110	24.108
140	24.110	24.108

BC−4088

COSEL

Model	LDA75F-24
Item	Input Current (by Load Current) 入力電流（負荷特性）
Output	――――

Temperature 25℃
Testing Circuitry Figure A

1. Graph

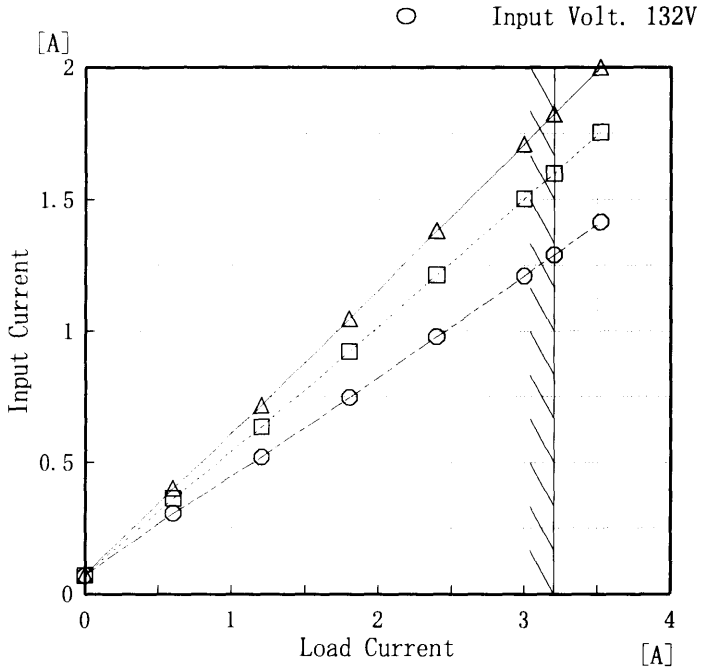

Note: Slanted line shows the range of the rated load current

(注)斜線は定格負荷電流範囲を示す。

2. Values

Load Current [A]	Input Current [A] Input Volt. 85[V]	Input Volt. 100[V]	Input Volt. 132[V]
0.00	0.071	0.071	0.070
0.60	0.401	0.363	0.308
1.20	0.716	0.634	0.520
1.80	1.048	0.922	0.747
2.40	1.381	1.213	0.979
3.00	1.710	1.502	1.210
3.20	1.822	1.600	1.291
3.52	1.997	1.753	1.414
—	—	—	—
—	—	—	—
—	—	—	—
—	—	—	—

BC-4088

COSEL

Model	LDA75F-24
Item	Input Power (by Load Current) 入力電力（負荷特性）
Output	————

Temperature 25℃
Testing Circuitry Figure A

1. Graph

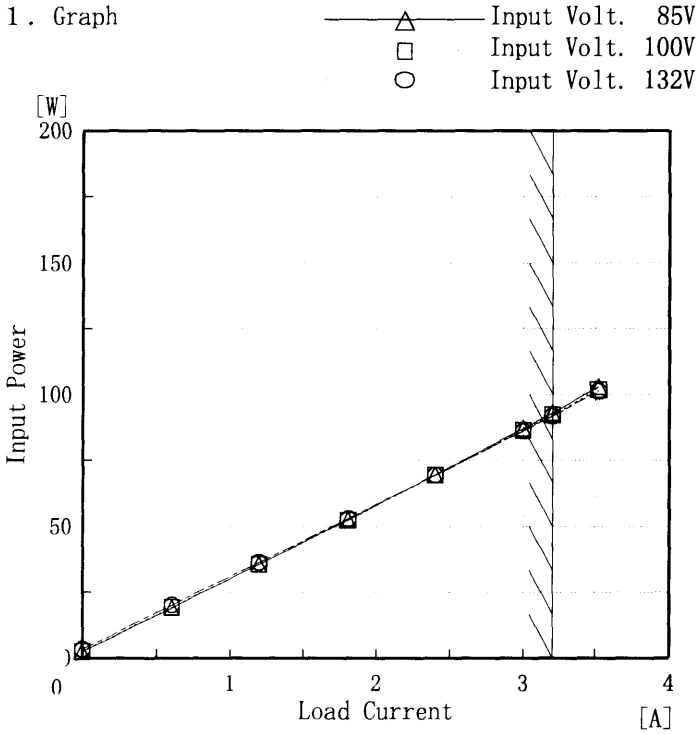

Note: Slanted line shows the range of the rated load current

(注)斜線は定格負荷電流範囲を示す。

2. Values

Load Current [A]	Input Power [W] Input Volt. 85[V]	Input Volt. 100[V]	Input Volt. 132[V]
0.00	2.25	2.51	3.18
0.60	18.98	19.26	20.10
1.20	35.60	35.67	36.29
1.80	52.44	52.38	52.90
2.40	69.63	69.39	69.50
3.00	87.30	86.60	86.40
3.20	93.10	92.40	92.00
3.52	102.90	101.90	101.30
—	—	—	—
—	—	—	—
—	—	—	—
—	—	—	—

COSEL

Model	LDA75F-24
Item	Efficiency 効率
Object	――――――――――

Temperature 25℃
Testing Circuitry Figure A

1. Graph

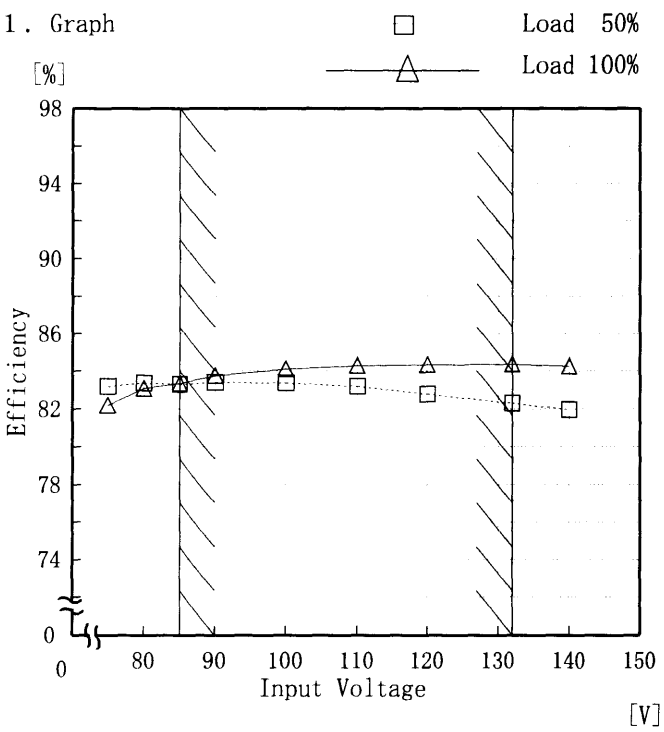

Note: Slanted line shows the range of the rated input voltage.

(注)斜線は定格入力電圧範囲を示す。

2. Values

Input Voltage [V]	Efficiency [%]	
	Load 50%	Load 100%
75	83.2	82.2
80	83.4	83.1
85	83.3	83.4
90	83.4	83.8
100	83.4	84.1
110	83.2	84.3
120	82.8	84.3
132	82.3	84.4
140	82.0	84.3

COSEL

Model	LDA75F-24
Item	Efficiency (by Load Current) 効率（負荷電流特性）
Output	————

Temperature 25℃
Testing Circuitry Figure A

1. Graph

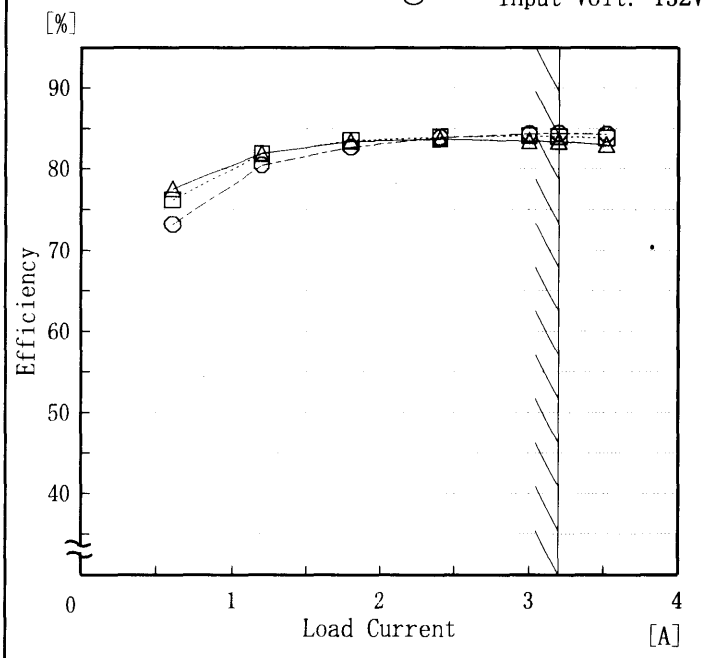

Note: Slanted line shows the range of the rated load current

(注)斜線は定格負荷電流範囲を示す。

2. Values

Load Current [A]	Efficiency [%] Input Volt. 85[V]	Input Volt. 100[V]	Input Volt. 132[V]
0.60	77.5	76.2	73.2
1.20	81.9	81.9	80.4
1.80	83.4	83.5	82.7
2.40	83.7	84.0	83.9
3.00	83.4	84.1	84.3
3.20	83.4	84.0	84.4
3.52	83.0	83.8	84.3
—	—	—	—
—	—	—	—
—	—	—	—
—	—	—	—
—	—	—	—

COSEL

Model	LDA75F-24
Item	Hold-Up Time 出力保持時間
Object	+24.0V3.2A

Temperature 25℃
Testing Circuitry Figure A

1. Graph

□ Load 50%
△ Load 100%

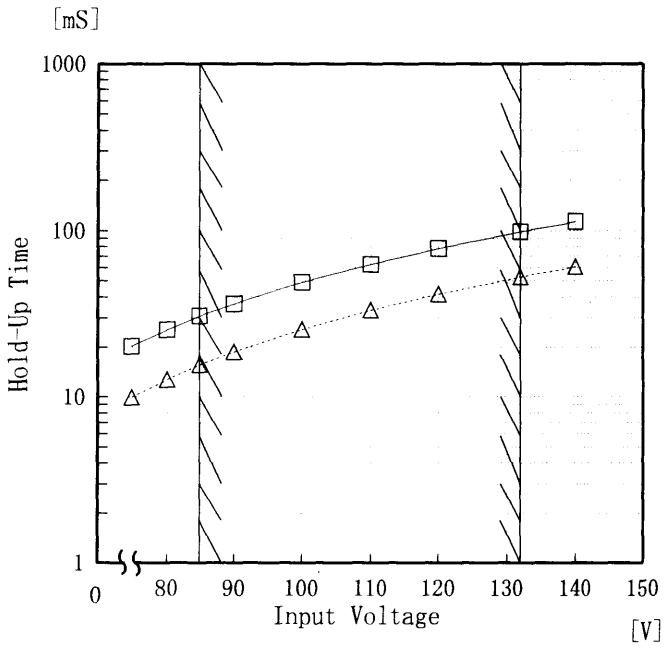

This duration covers from Shut-off of input voltage to the moment when output voltage descends to the rated range of voltage accuracy.

Note: Slanted line shows the range of the rated input voltage.

出力保持時間とは、入力電圧断から出力電圧が、定電圧精度の規格範囲を保持しているところまでの時間。

(注)斜線は定格入力電圧範囲を示す。

2. Values

Input Voltage [V]	Hold-Up Time [mS]	
	Load 50%	Load 100%
75	20	10
80	25	13
85	31	16
90	36	19
100	49	26
110	63	33
120	78	42
132	98	53
140	113	61

COSEL

Model	LDA75F-24
Item	Instantaneous Interruption Compensation 瞬時停電保障
Object	+24.0V3.2A

Temperature 25℃
Testing Circuitry Figure A

1. Graph

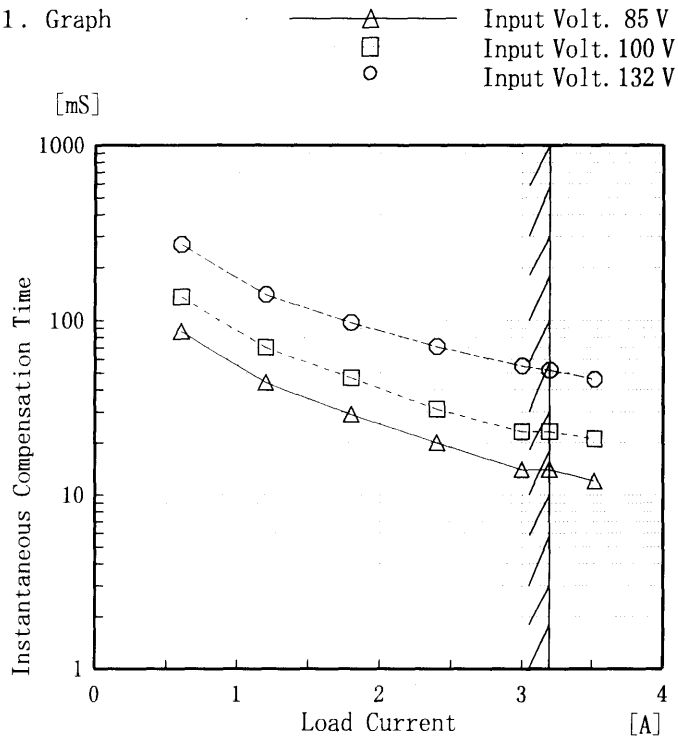

This duration covers from Shut-off of input voltage to the moment when output voltage descends to the rated range of voltage accuracy.
Note:Slanted line shows the range of the rated load current.

瞬時停電保障時間とは、出力電圧が定電圧精度の規格範囲を保持している瞬時停電時間をいう。
(注)斜線は定格負荷電流範囲を示す。

2. Values

Load Current [A]	Time [mS]		
	Input Volt. 85[V]	Input Volt. 100[V]	Input Volt. 132[V]
0.00	—	—	—
0.60	86	136	270
1.20	44	70	140
1.80	29	47	97
2.40	20	31	71
3.00	14	23	55
3.20	14	23	52
3.52	12	21	46
—	—	—	—
—	—	—	—
—	—	—	—

BC-4088

COSEL

Model	LDA75F-24
Item	Load Regulation 静的負荷変動
Object	+24.0V3.2A

Temperature 25℃
Testing Circuitry Figure A

1. Graph

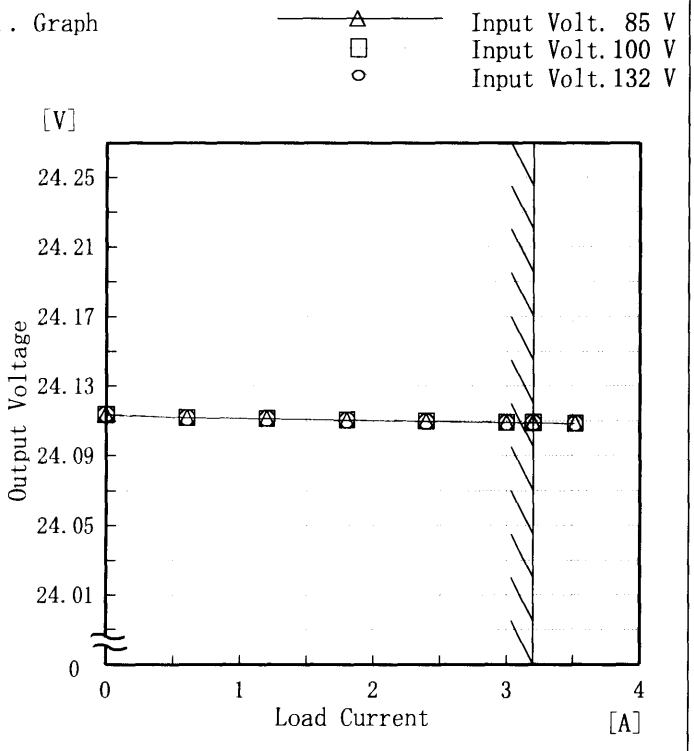

Note: Slanted line shows the range of the rated load current.

(注)斜線は定格負荷電流範囲を示す。

2. Values

Load Current [A]	Output Voltage [V] Input Volt. 85[V]	Input Volt. 100[V]	Input Volt. 132[V]
0.00	24.114	24.114	24.114
0.60	24.112	24.112	24.112
1.20	24.111	24.111	24.111
1.80	24.111	24.111	24.110
2.40	24.110	24.110	24.110
3.00	24.109	24.109	24.109
3.20	24.109	24.109	24.109
3.52	24.109	24.109	24.109
—	—	—	—
—	—	—	—

COSEL

Model	LDA75F-24
Item	Ripple Voltage(by Load Current) リップル電圧(負荷電流特性)
Object	+24.0V3.2A

Temperature 25℃
Testing Circuitry Figure A

1. Graph

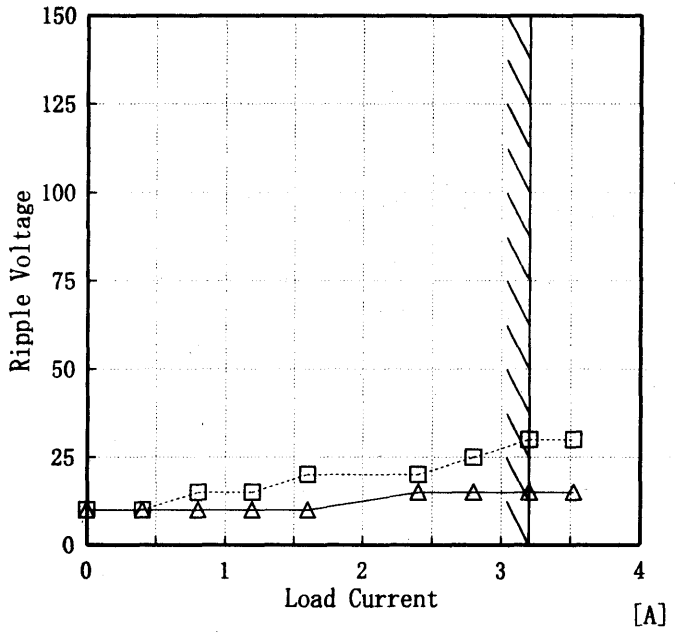

Ripple Voltage is shown as p-p in the figure below.

Note: Slanted line shows the range of the rated load current.

リップル電圧は、下図ｐ－ｐ値で示される。
(注)斜線は定格負荷電流範囲を示す。

T1: Due to AC Input Line
入力商用周期
T2: Due to Switching
ｽｲｯﾁﾝｸﾞ周期

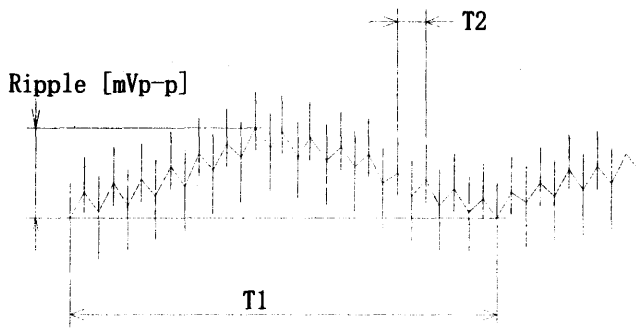

Fig. Complex Ripple Wave Form
図 リップル波形詳細図

2. Values

Load Current [A]	Input Volt. 85 [V] Ripple Output Volt. [mV]	Input Volt. 132 [V] Ripple Output Volt. [mV]
0.00	10	10
0.40	10	10
0.80	15	10
1.20	15	10
1.60	20	10
2.40	20	15
2.80	25	15
3.20	30	15
3.52	30	15
—	—	—
—	—	—

COSEL

Model	LDA75F-24
Item	Ripple-Noise リップルノイズ
Object	+24.0V3.2A

Temperature 25℃
Testing Circuitry Figure A

1. Graph

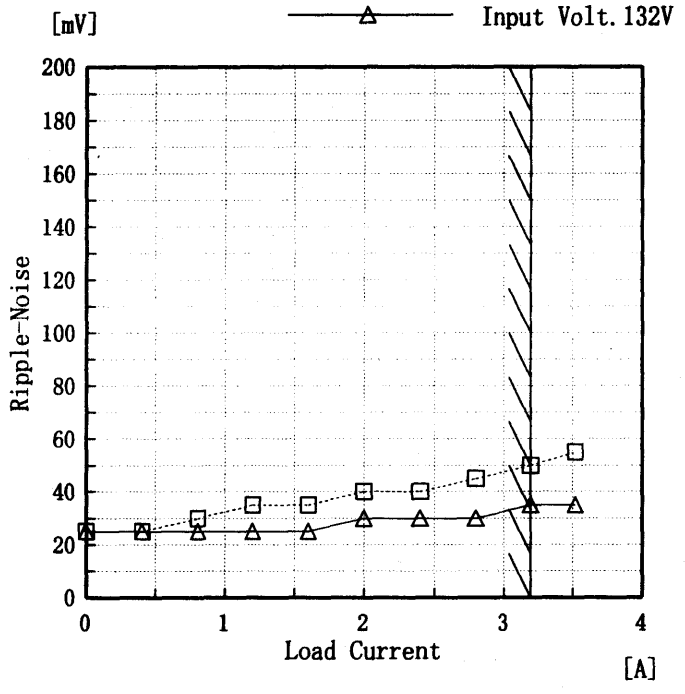

Ripple-Noise is shown as p-p in the figure below.
Note: Slanted line shows the range of the rated load current.

リップルノイズは、下図ｐ－ｐ値で示される。
(注)斜線は定格負荷電流範囲を示す。

T1: Due to AC Input Line
入力商用周期
T2: Due to Switching
ｽｲｯﾁﾝｸﾞ周期

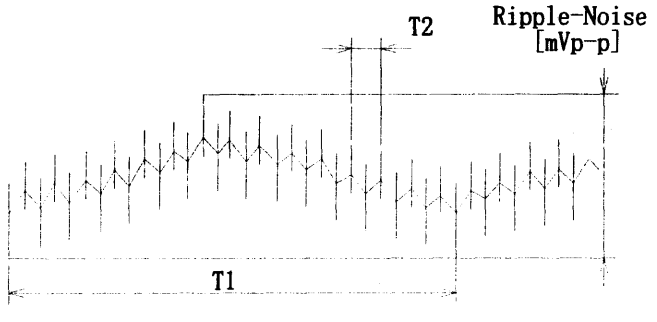

Fig. Complex Ripple Wave Form
図 リップル波形詳細図

2. Values

Load current [A]	Input Volt. 85 [V] Ripple-Noise [mV]	Input Volt. 132 [V] Ripple-Noise [mV]
0.00	25	25
0.40	25	25
0.80	30	25
1.20	35	25
1.60	35	25
2.00	40	30
2.40	40	30
2.80	45	30
3.20	50	35
3.52	55	35
—	—	—

COSEL

Model	LDA75F-24
Item	Overcurrent Protection 過電流保護
Object	+24.0V3.2A

Temperature 25℃
Testing Circuitry Figure A

1. Graph

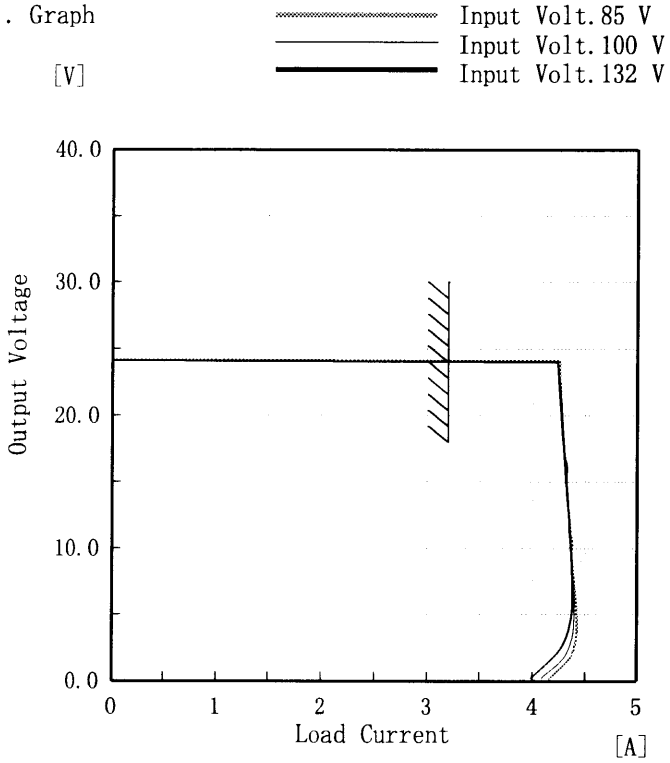

Note: Slanted line shows the range of the rated load current.

(注)斜線は定格負荷電流範囲を示す。

2. Values

Output Voltage [V]	Load Current [A]		
	Input Volt. 85[V]	Input Volt. 100[V]	Input Volt. 132[V]
24.00	4.26	4.23	4.23
22.80	4.26	4.24	4.25
21.60	4.26	4.25	4.26
19.20	4.28	4.27	4.28
16.80	4.30	4.29	4.30
14.40	4.33	4.32	4.33
12.00	4.35	4.35	4.35
9.60	4.37	4.36	4.37
7.20	4.40	4.39	4.38
4.80	4.42	4.40	4.37
2.40	4.40	4.35	4.26
0.00	4.15	4.08	3.98

COSEL

Model	LDA75F-24
Item	Overvoltage Protection 過電圧保護
Object	+24.0V3.2A

Testing Circuitry Figure A

1. Graph

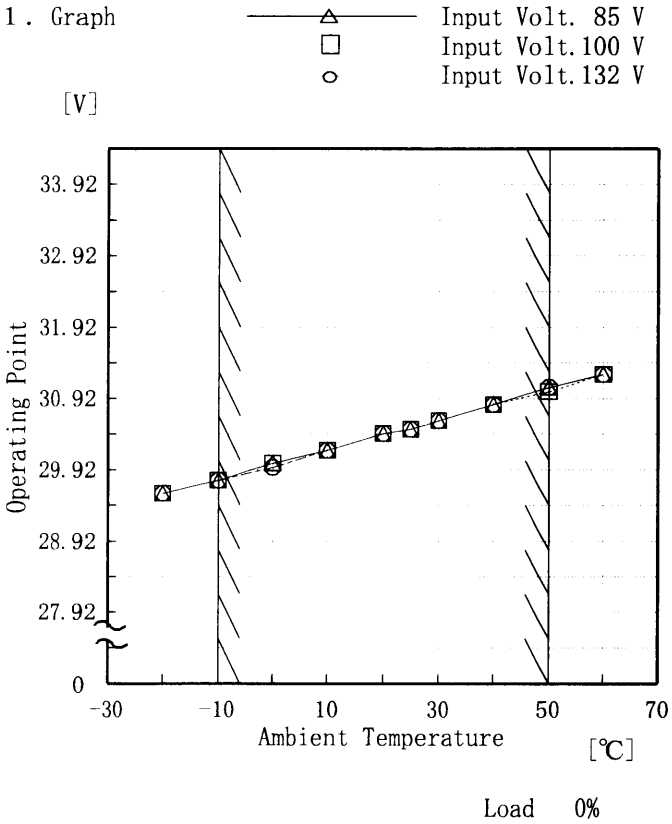

Note: Slanted line shows the range of the rated ambient temperature.

(注)斜線は定格周囲温度範囲を示す。

2. Values

Ambient Temperature [℃]	Operating Point [V]		
	Input Volt. 85[V]	Input Volt. 100[V]	Input Volt. 132[V]
-20	29.59	29.59	29.59
-10	29.77	29.77	29.77
0	30.01	30.01	29.95
10	30.19	30.19	30.19
20	30.43	30.43	30.43
25	30.49	30.49	30.49
30	30.61	30.61	30.61
40	30.84	30.84	30.84
50	31.08	31.02	31.08
60	31.26	31.26	31.26
—	—	—	—

COSEL

Model	LDA75F-24	Temperature 25℃
Item	Inrush Current 突入電流	Testing Circuitry Figure A
Object	――――――――	

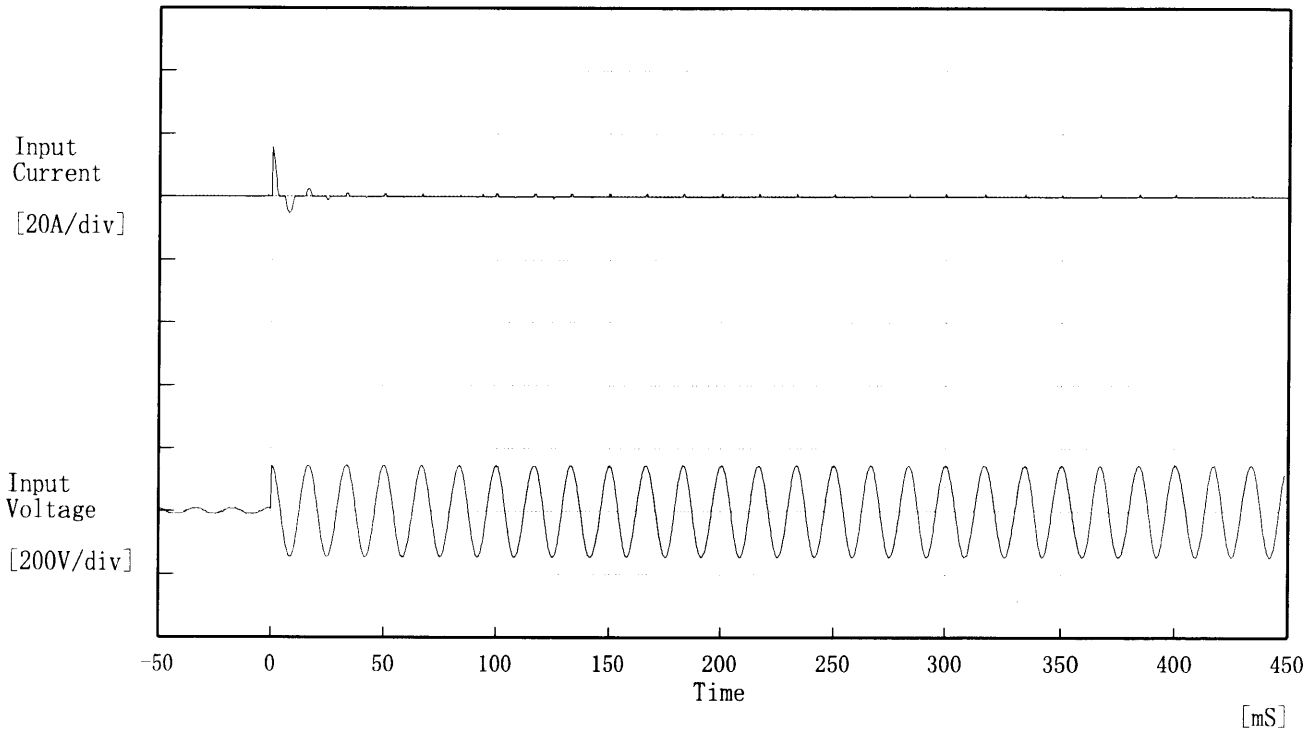

Input Voltage 100 V
Frequency 60 Hz
Load 100 %
Inrush Current
① 15.56 [A]
② 0.84 [A]

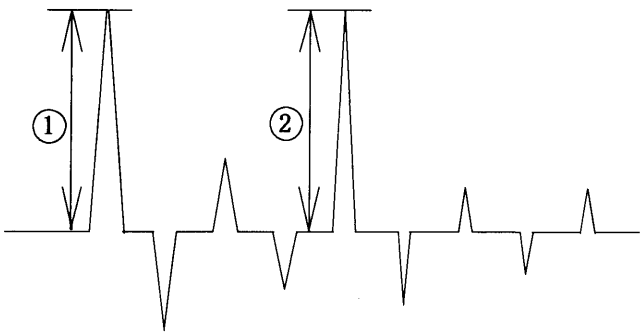

BC―4088

COSEL

Model	LDA75F-24		
Item	Dynamic Load Responce 動的負荷変動	Temperature Testing Circuitry	25℃ Figure A
Object	+24.0V3.2A		

Input Volt. 100 V
Cycle 1000 mS

Load Current

Load 0% ←→
Load 100 %

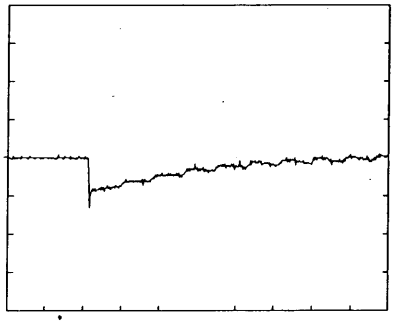

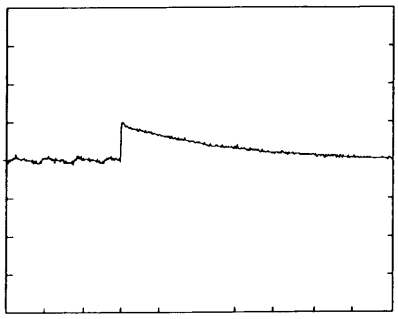

Load 0% ←→
Load 50 %

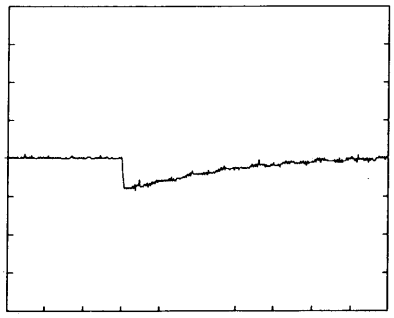

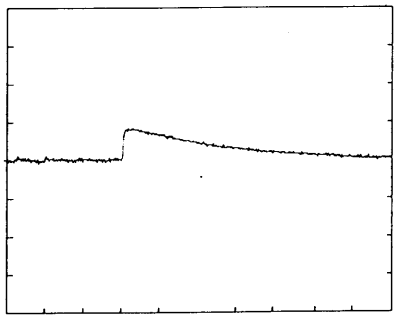

100 mV/div

10 mS/div

BC—4088

COSEL

Model	LDA75F-24		
Item	Rise and Fall Time 立上り、立下り時間	Temperature Testing Circuitry	25℃ Figure A
Object	+24.0V3.2A		

1. Graph

Input Volt. 85 V

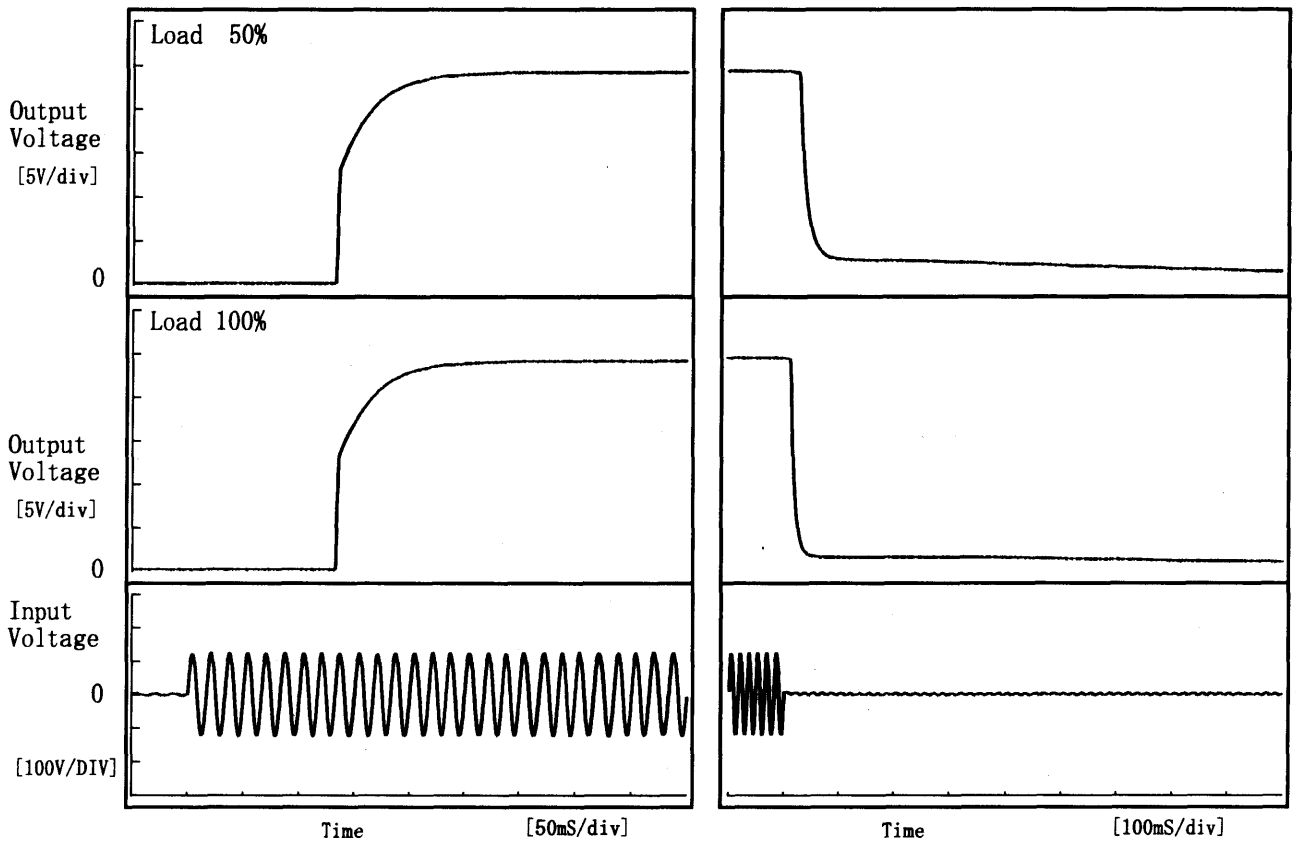

2. Values

[mS]

Load \ Time	T d	T r	T s	T h	T f
50 %	133.8	47.3	181.0	32.0	294.5
100 %	133.8	47.3	181.0	15.5	22.5

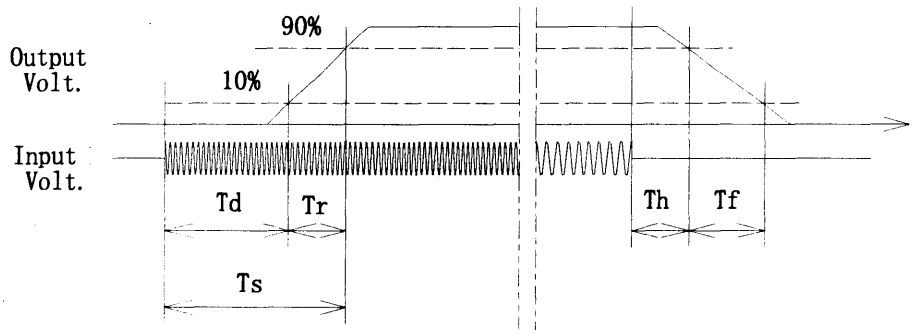

BC−4088

COSEL

Model	LDA75F-24
Item	Ambient Temperature Drift 周囲温度変動
Object	+24.0V3.2A

Testing Circuitry Figure A

1. Graph

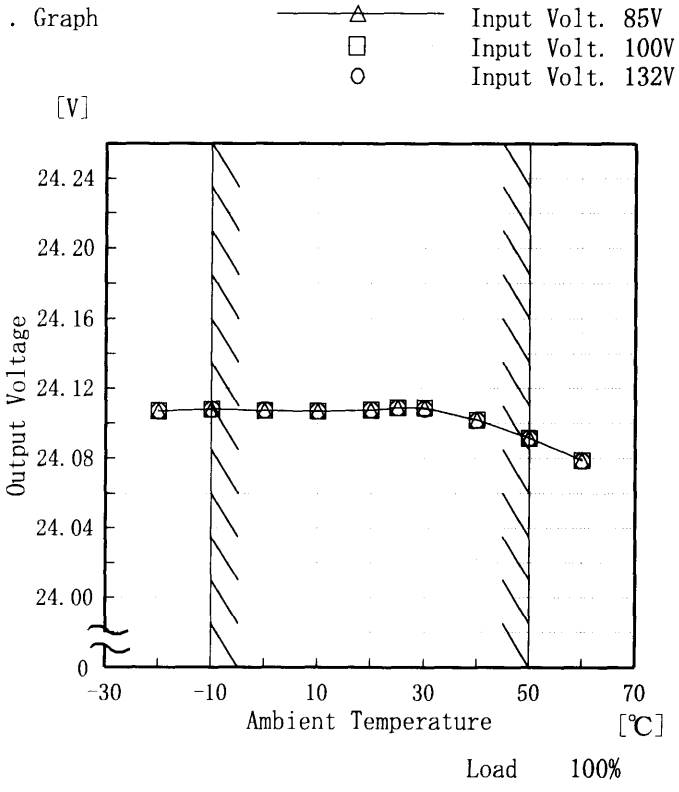

Note: Slanted line shows the range of the rated ambient temperature.

(注)斜線は定格周囲温度範囲を示す。

2. Values

Temperature [℃]	Output Voltage [V]		
	Input Volt. 85[V]	Input Volt. 100[V]	Input Volt. 132[V]
-20	24.107	24.107	24.107
-10	24.108	24.108	24.108
0	24.107	24.107	24.107
10	24.107	24.107	24.107
20	24.108	24.108	24.108
25	24.109	24.109	24.109
30	24.109	24.109	24.108
40	24.102	24.102	24.102
50	24.092	24.091	24.091
60	24.079	24.079	24.079
—	—	—	—

COSEL

Model	LDA75F-24
Item	Minimum Input Voltage for Regulated Output Voltage 最低レギュレーション電圧
Object	+24.0V3.2A

Testing Circuitry Figure A

1. Graph

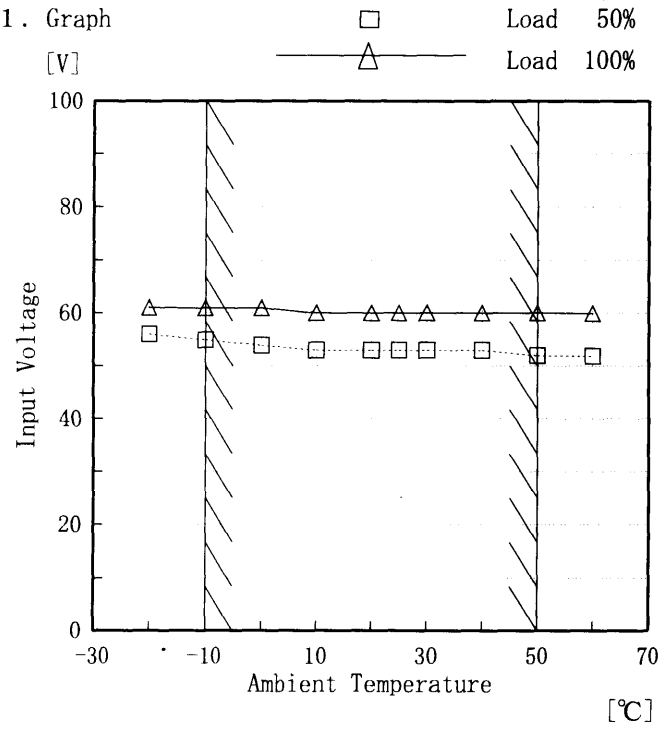

Note: Slanted line shows the range of the rated ambient temperature.

(注)斜線は定格周囲温度範囲を示す。

2. Values

Ambient Temperature [℃]	Input Voltage [V]	
	Load 50%	Load 100%
-20	56	61
-10	55	61
0	54	61
10	53	60
20	53	60
25	53	60
30	53	60
40	53	60
50	52	60
60	52	60
—	—	—

COSEL

Model	LDA75F-24
Item	Ripple Voltage (by Ambient Temp.) リップル電圧（周囲温度特性）
Object	+24.0V3.2A

Testing Circuitry　Figure A

1. Graph

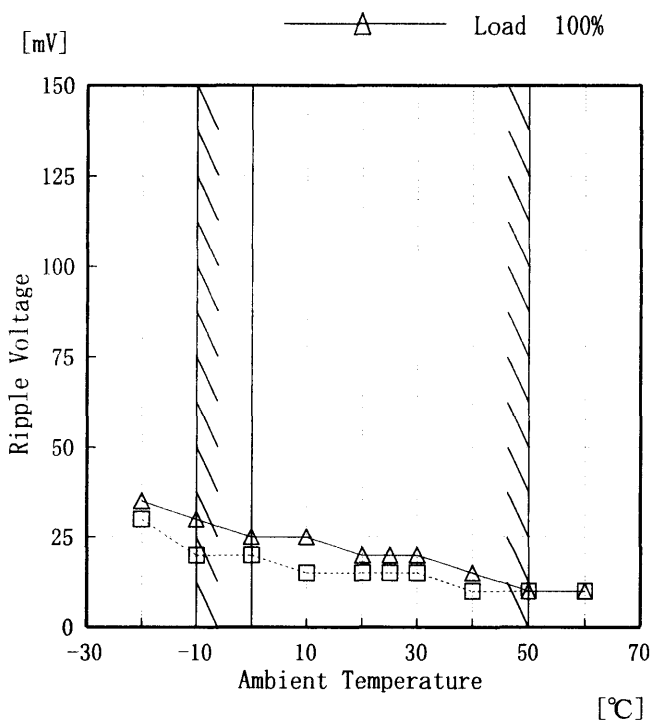

Input Volt.　100 V

Note: Slanted line shows the range of the rated ambient temperature.

(注)斜線は定格周囲温度範囲を示す。

2. Values

Ambient Temp. [℃]	Load 50% Ripple Output Volt. [mV]	Load 100% Ripple Output Volt. [mV]
-20	30	35
-10	20	30
0	20	25
10	15	25
20	15	20
25	15	20
30	15	20
40	10	15
50	10	10
60	10	10
—	—	—

COSEL

Model	LDA75F-24
Item	Time Lapse Drift 経時ドリフト
Object	+24.0V3.2A

Temperature 25℃
Testing Circuitry Figure A

1. Graph

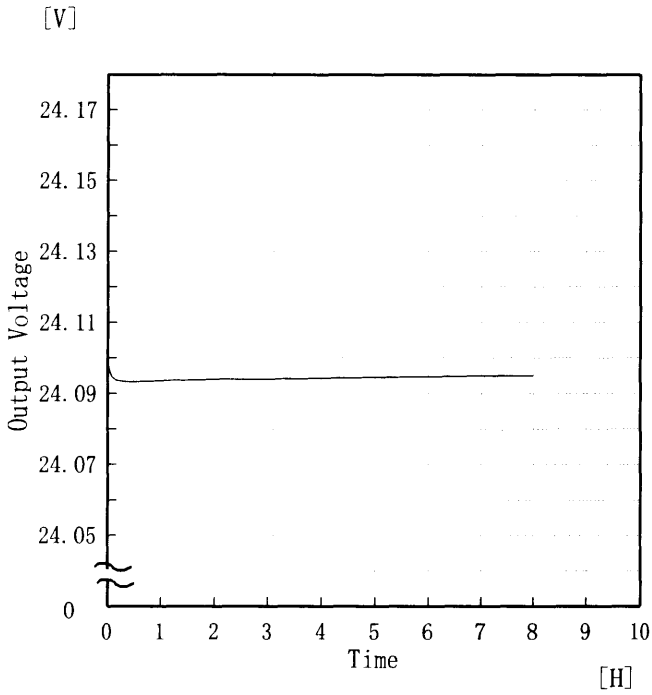

Input Volt. 100V
Load 100%

2. Values

Time since start [H]	Output Voltage [V]
0.0	24.102
0.5	24.093
1.0	24.094
2.0	24.094
3.0	24.094
4.0	24.094
5.0	24.095
6.0	24.095
7.0	24.095
8.0	24.095

COSEL

Model	LDA75F-24	
Item	Output Voltage Accuracy 定電圧精度	Testing Circuitry Figure A
Object	+24.0V3.2A	

Output Voltage Accuracy

This is defined as the value of the output voltage, regulation load, ambient temperature and input voltage varied at random in the range as specified below.

Temperature : -10～50 ℃
Input Voltage : 85～132 V
Load Current : 0～3.2 A

* Output Voltage Accuracy = ±(Maximum of Output Voltage − Minimum of Output Voltage)／2

$$* \text{ Output Voltage Accuracy (Ration)} = \frac{\text{Output Voltage Accuracy}}{\text{Rated Output Voltage}} \times 100$$

定電圧精度

周囲温度、入力電圧、負荷電流を下記仕様内で、任意に変動させたときの出力電圧の変動をいう。

周囲温度 -10～50 ℃
入力電圧 85～132 V
負荷電流 0～3.2 A

* 定電圧精度(変動値) = ±(出力電圧の最高値−出力電圧の最低値)／2

$$* \text{ 定電圧精度(変動率)} = \frac{\text{変動値}}{\text{定格出力電圧}} \times 100$$

Item	Temperature [℃]	Input Voltage [V]	Output Current [A]	Output Voltage [V]	Output Voltage Accuracy [mV]	Output Voltage Accuracy (Ration) [%]
Maximum Voltage	25	85	0.0	24.116	±15	±0.1
Minimum Voltage	50	132	3.2	24.088		

COSEL

Model	LDA75F-24	
Item	Condensation 結露特性	Testing Circuitry Figure A
Object	+24.0V3.2A	

1. Condensation test

Testing procedure is as follows.

① Keeping and cooling the unit in a tank at -10℃ for an hour with the input off.

② Taking it out of the tank and dewing itself in a room where the temperature is 25℃ and the humidity is 40%RH.

③ Testing electrical characteristics of the unit to confirm there be no fault.

1．結露特性試験

入力を切った状態で、恒温槽で－１０℃に冷却しておき、約１時間後に恒温槽から取り出し、室温２５℃、湿度４０％RHの状態におき結露させ、その電気的特性の測定を行い、異常のないことを確認する。

2. Values

Item	Data	Testing Conditions
Output Voltage [V]	24.108	Input Volt.: 100V, Load Current:3.2A
Line Regulation [mV]	3	Input Volt.: 85～132V, Load Current:3.2A
Load Regulation [mV]	6	Input Volt.: 100V, Load Current:0.0～3.2A

COSEL

Model	LDA75F-24		
Item	Leakage Current 漏洩電流	Temperature Testing Circuitry	25℃ Figure B
Object	――――――		

1. Results

Standards	Leakage Current [mA]		
	Input Volt. 85 [V]	Input Volt. 100 [V]	Input Volt. 132 [V]
(A) DENTORI	0.15	0.17	0.22
(B) IEC60950	0.14	0.16	0.20

Standards	Leakage Current [mA]		
	Input Volt. 170 [V]	Input Volt. 230 [V]	Input Volt. 264 [V]
(B) IEC60950	—	—	—

2. Condition

Leakage current value is concluded after measuring both phases of AC input and by choosing the larger one.

交流入力の両相について測定し、その大きい方を漏洩電流測定値とする。

COSEL

Model	LDA75F-24		
Item	Line Noise Tolerance 入力雑音耐量	Temperature Testing Circuitry	25℃ Figure C
Object	+24.0V3.2A		

1. Results

Pulse Width [nS]	MODE	No protection failure should occur 保護回路の誤動作がない	DC-like Regulation of Output Voltage 出力電圧の直流的変動
50	COMMON	OK	no fluctuation
	NORMAL	OK	no fluctuation
1000	COMMON	OK	no fluctuation
	NORMAL	OK	no fluctuation

2. Conditions

Input Voltage : 100 V
Pulse Voltage : 2000 V
Pulse Cycle : 10 mS
Pulse Input Duration : 1 min. or more
Load : 100 %

COSEL

Model	LDA75F-24		
Item	Conducted Emission 雑音端子電圧	Temperature Testing Circuitry	25℃ Figure D
Object	――――――		

1. Graph

Remarks

Input Volt. 100 V (VCCI Class B)
120 V (FCC Class B)

Load 100 %

規格1：[VCCI] Class B(平均値)
規格2：[VCCI] Class B(QP)

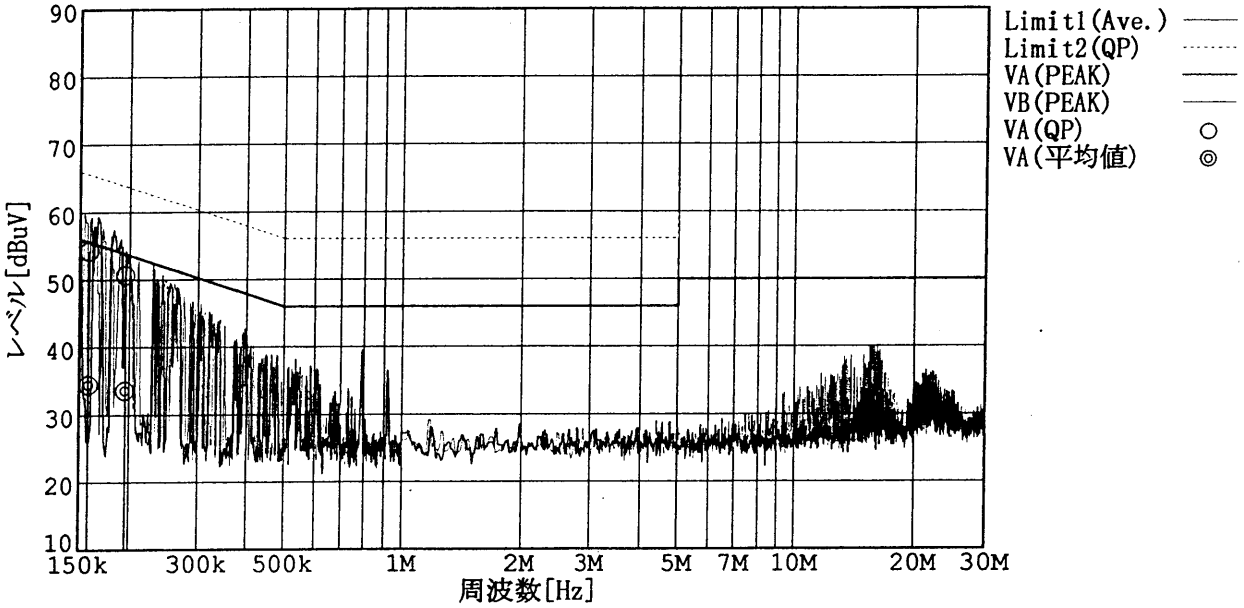

規格1：[FCC Part15] Class B

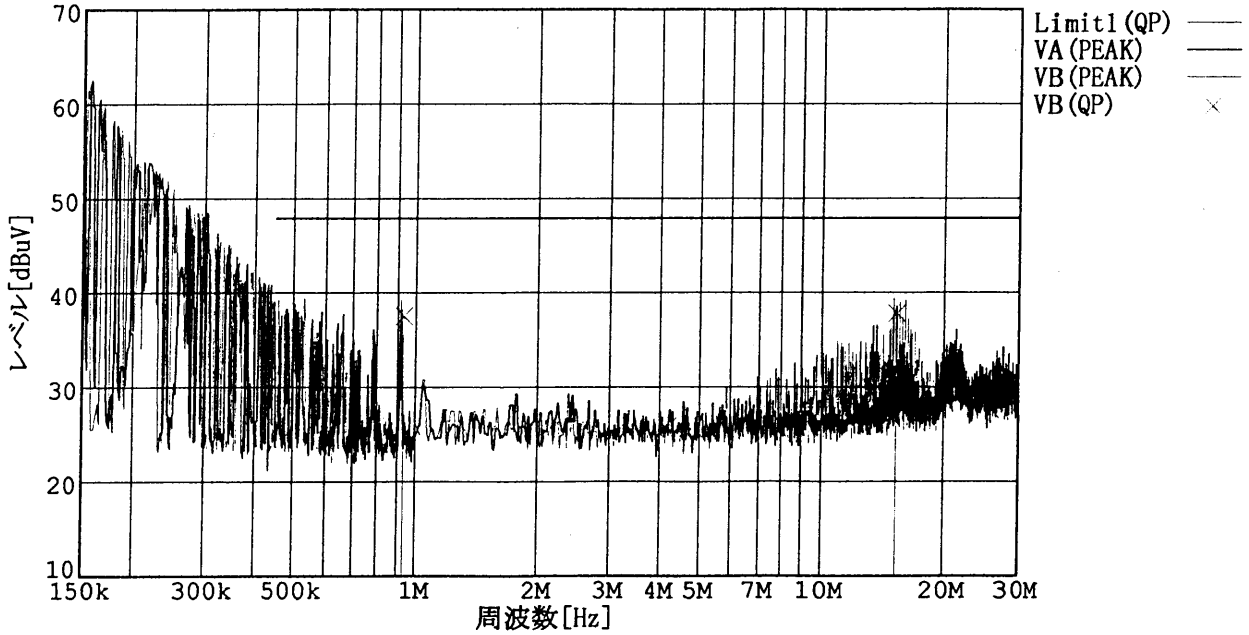

BC－4088

COSEL

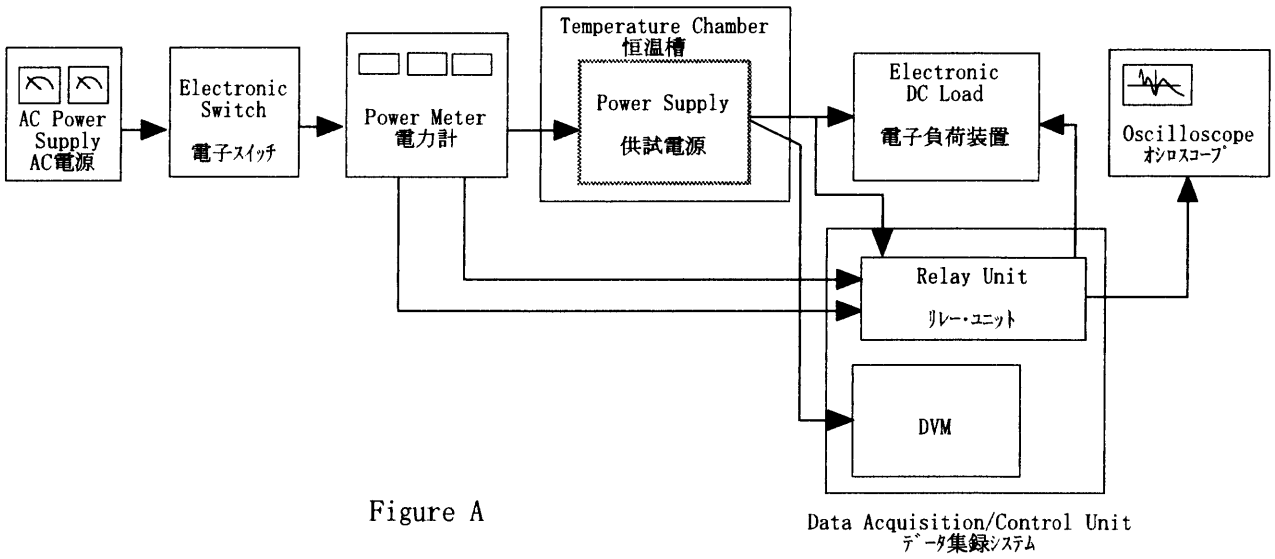

Figure A

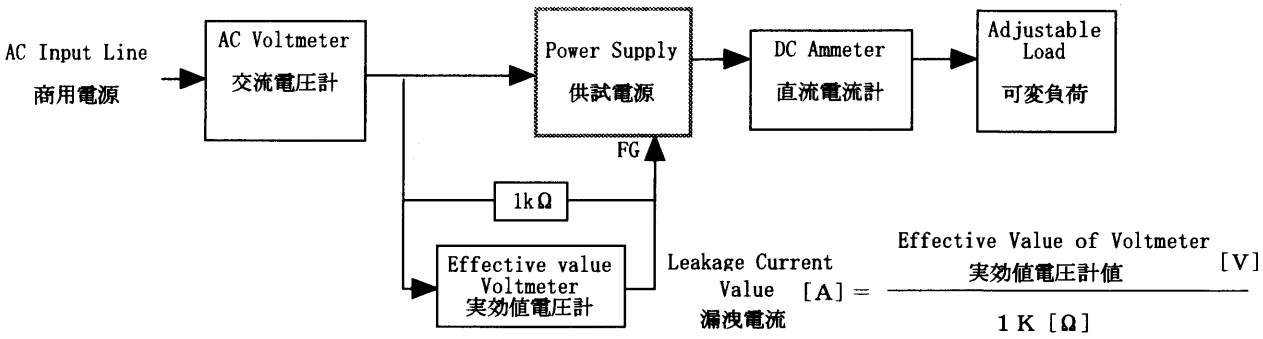

Figure B(DENTORI)

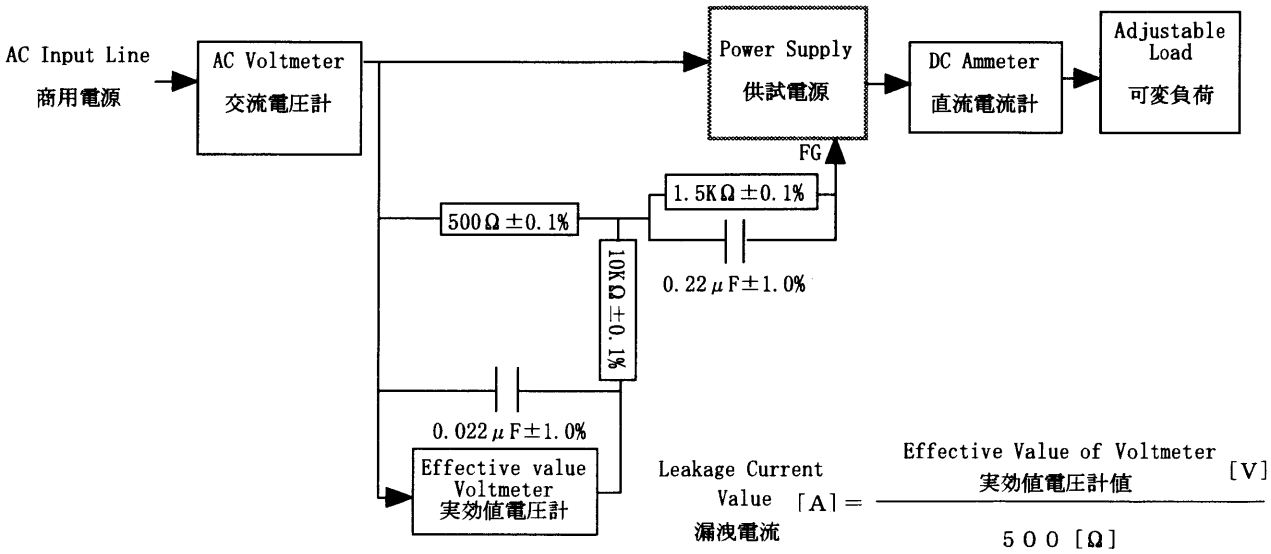

Figure B (IEC60950)

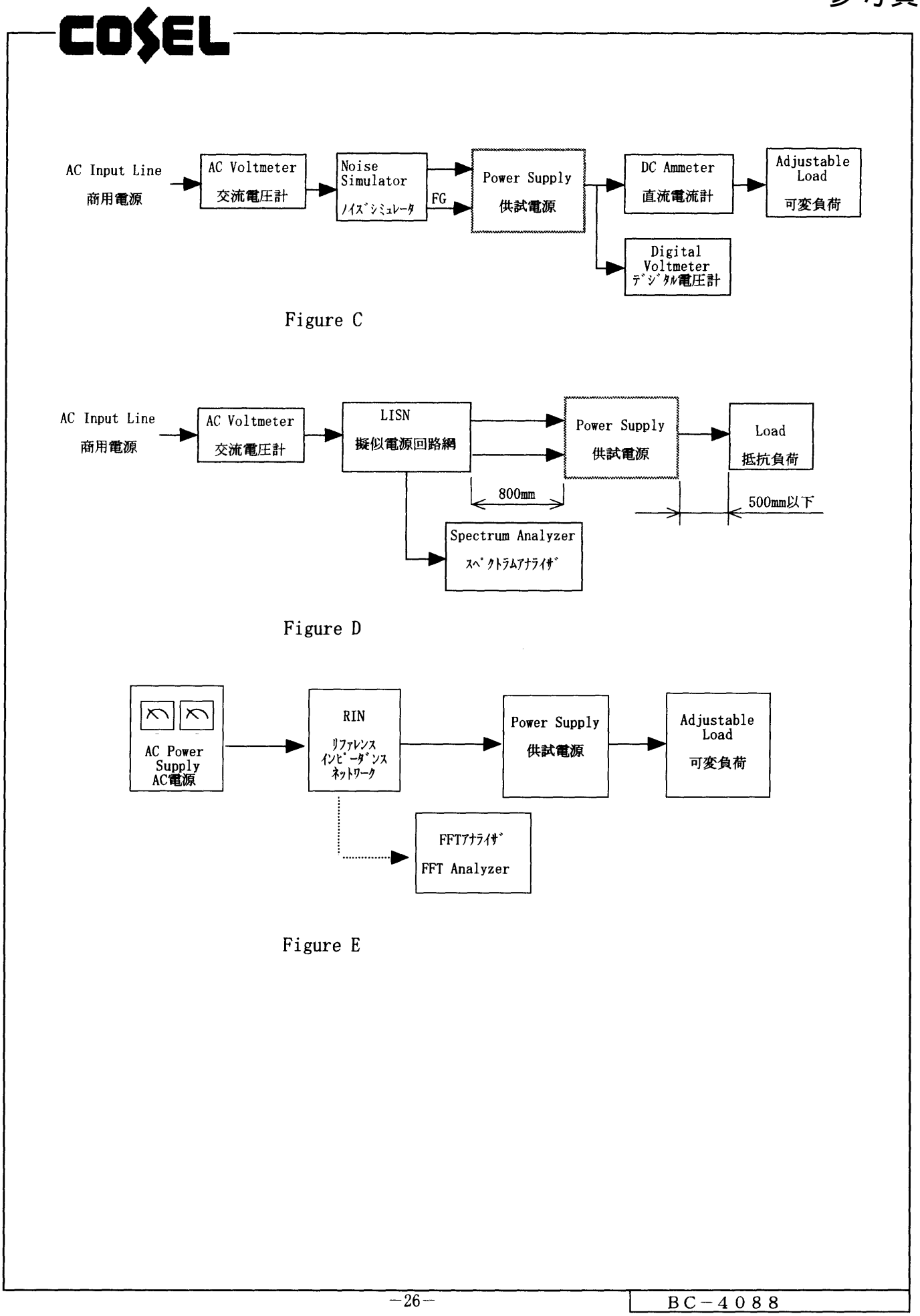
AC Input Line
商用電源
AC Voltmeter
交流電圧計
Noise Simulator
ﾉｲｽﾞｼﾐｭﾚｰﾀ
FG
Power Supply
供試電源
DC Ammeter
直流電流計
Adjustable Load
可変負荷
Digital Voltmeter
ﾃﾞｼﾞﾀﾙ電圧計
Figure C
AC Input Line
商用電源
AC Voltmeter
交流電圧計
LISN
擬似電源回路網
Power Supply
供試電源
Load
抵抗負荷
800mm
500mm以下
Spectrum Analyzer
ｽﾍﾟｸﾄﾗﾑｱﾅﾗｲｻﾞ
Figure D
AC Power Supply
AC電源
RIN
ﾘﾌｧﾚﾝｽ
ｲﾝﾋﾟｰﾀﾞﾝｽ
ﾈｯﾄﾜｰｸ
Power Supply
供試電源
Adjustable Load
可変負荷
FFTｱﾅﾗｲｻﾞ
FFT Analyzer
Figure E