参考資料

COSEL

TEST DATA OF AME600F

(200VAC INPUT)

Regulated DC power supply
August 27, 2019

Approved by : Yoshimichi Hirokawa

Yoshimichi Hirokawa Design Manager

Prepared by : Enkyo Kaku

Enkyo Kaku Design Engineer

INPUT : 170 - 264VAC

COSEL CO.,LTD.

CONTENTS

(Final Page 14)

COSEL

Model	AME600F
Item	Input Current
Object	――――――――

Temperature 25°C
Testing Circuitry Figure A

1. Graph

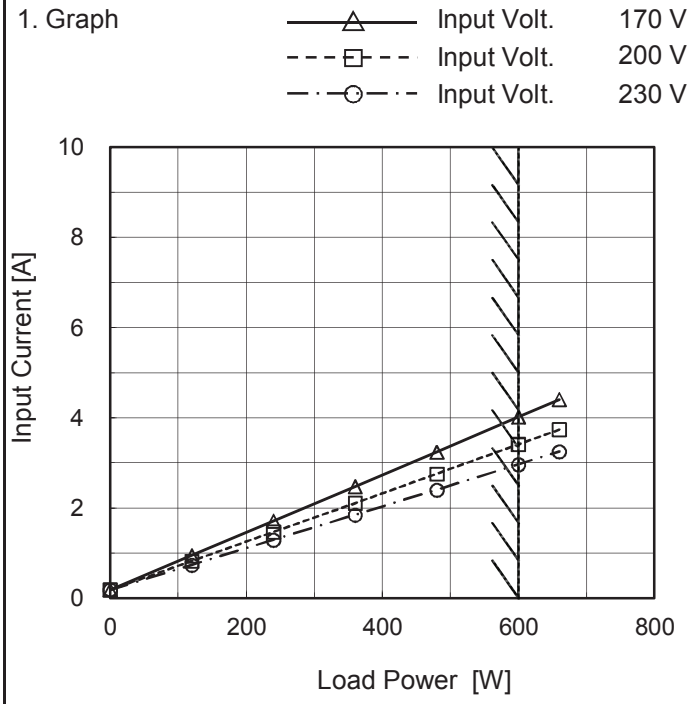

Note:
Hatched line shows the range of the rated load power.

2. Value

Load Power [W]	Input Current [A]		
	Input Volt. 170[V]	Input Volt. 200[V]	Input Volt. 230[V]
0	0.187	0.186	0.186
120	0.947	0.823	0.735
240	1.708	1.467	1.289
360	2.473	2.106	1.844
480	3.239	2.755	2.397
600	4.020	3.411	2.962
660	4.410	3.740	3.250
--	--	--	--
--	--	--	--
--	--	--	--
--	--	--	--

BC-11328

COSEL

Model	AME600F
Item	Input Power
Object	――――――――

Temperature 25°C
Testing Circuitry Figure A

1. Graph

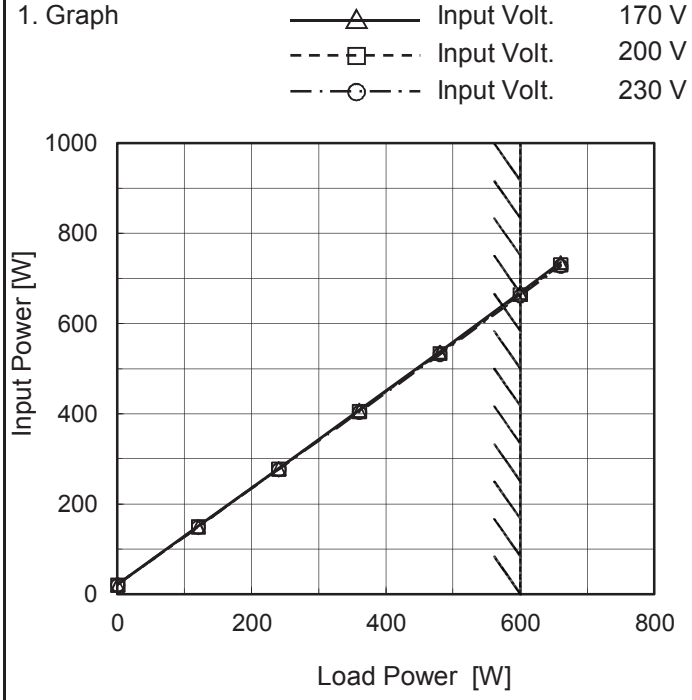

Note:
Hatched line shows the range of the rated load power.

2. Value

Load Power [W]	Input Power [W]		
	Input Volt. 170[V]	Input Volt. 200[V]	Input Volt. 230[V]
0	21.8	20.8	20.6
120	150.1	149.5	148.9
240	279.0	278.0	276.6
360	408.0	406.0	404.0
480	537.0	534.0	532.0
600	669.0	665.0	662.0
660	736.0	731.0	728.0
--	--	--	--
--	--	--	--
--	--	--	--
--	--	--	--

BC-11328

COSEL

Model	AME600F
Item	Efficiency (by Input Voltage)
Object	――――――――

Temperature 25°C
Testing Circuitry Figure A

1. Graph

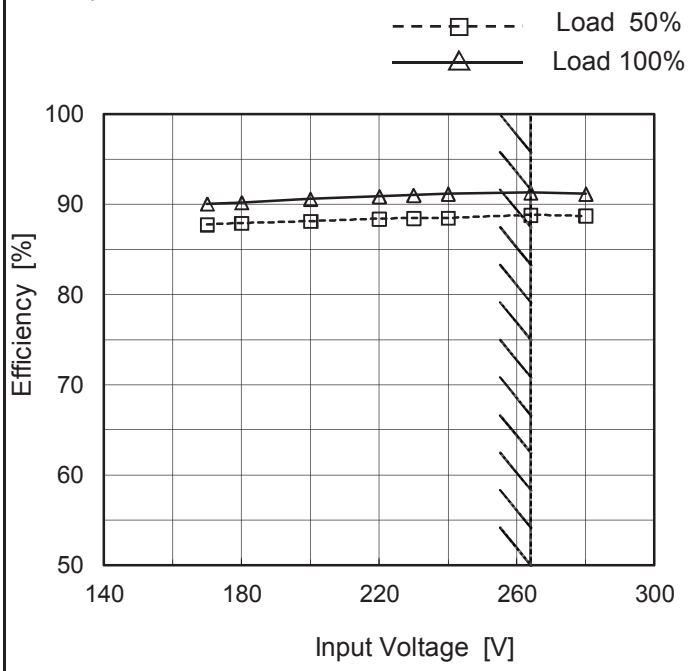

Note:
Hatched line shows the input voltage range.

2. Value

Input Voltage [V]	Efficiency [%]	
	Load 50%	Load 100%
170	87.8	90.1
180	87.9	90.2
200	88.1	90.6
220	88.4	90.9
230	88.5	91.0
240	88.5	91.2
264	88.8	91.3
280	88.7	91.2
--	--	--

BC-11328

COSEL

Model	AME600F
Item	Efficiency (by Load Power)
Object	――――――

Temperature 25°C
Testing Circuitry Figure A

1. Graph

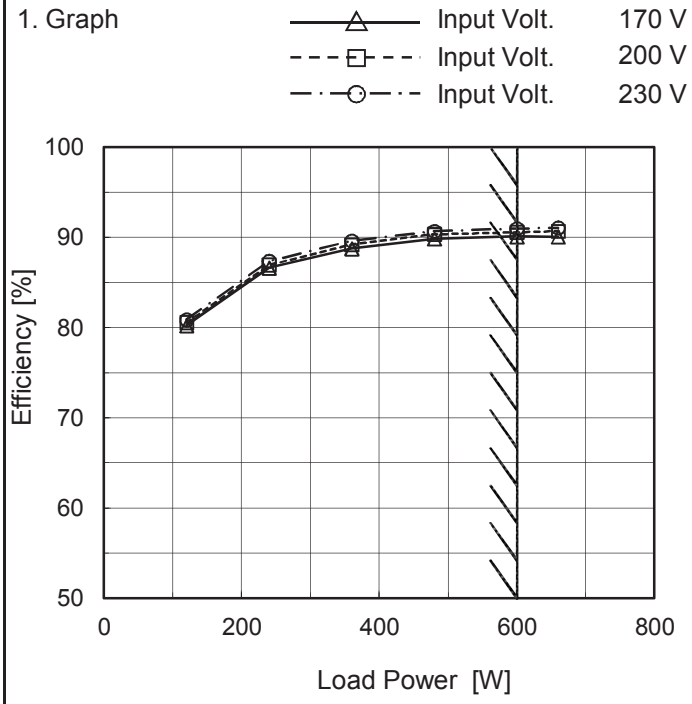

Note:
Hatched line shows the range of the rated load power.

2. Value

Load Power [W]	Efficiency [%]		
	Input Volt. 170[V]	Input Volt. 200[V]	Input Volt. 230[V]
0	––	––	––
120	80.2	80.6	80.9
240	86.6	87.0	87.4
360	88.8	89.2	89.6
480	89.9	90.4	90.7
600	90.1	90.6	91.0
660	90.1	90.7	91.1
--	--	--	--
--	--	--	--
--	--	--	--
--	--	--	--

BC-11328

COSEL

Model	AME600F
Item	Power Factor (by Input Voltage)
Object	――――――

Temperature 25°C
Testing Circuitry Figure A

1. Graph

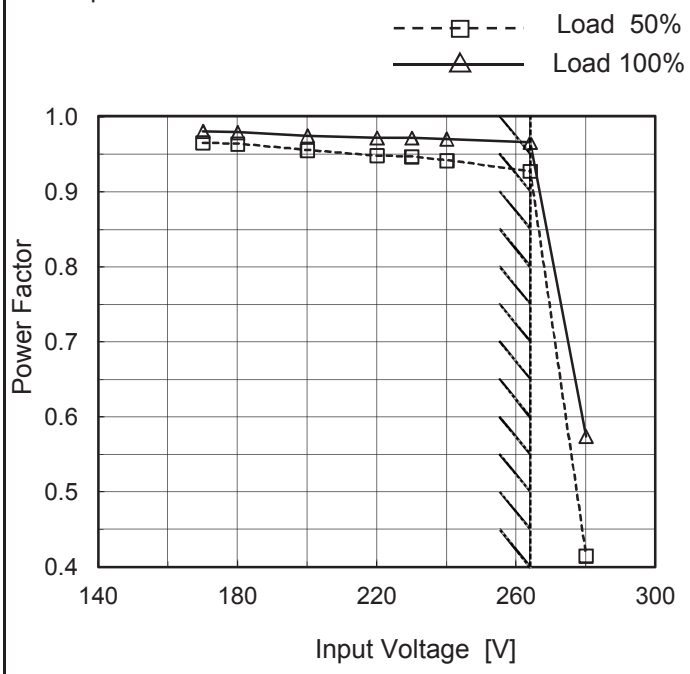

Note:
Hatched line shows the input voltage range.

2. Value

Input Voltage [V]	Power Factor	
	Load 50%	Load 100%
170	0.966	0.981
180	0.964	0.979
200	0.956	0.975
220	0.949	0.972
230	0.947	0.972
240	0.942	0.971
264	0.928	0.966
280	0.415	0.574
--	--	--

BC-11328

COSEL

Model	AME600F
Item	Power Factor (by Load Power)
Object	――――――

Temperature 25°C
Testing Circuitry Figure A

1. Graph

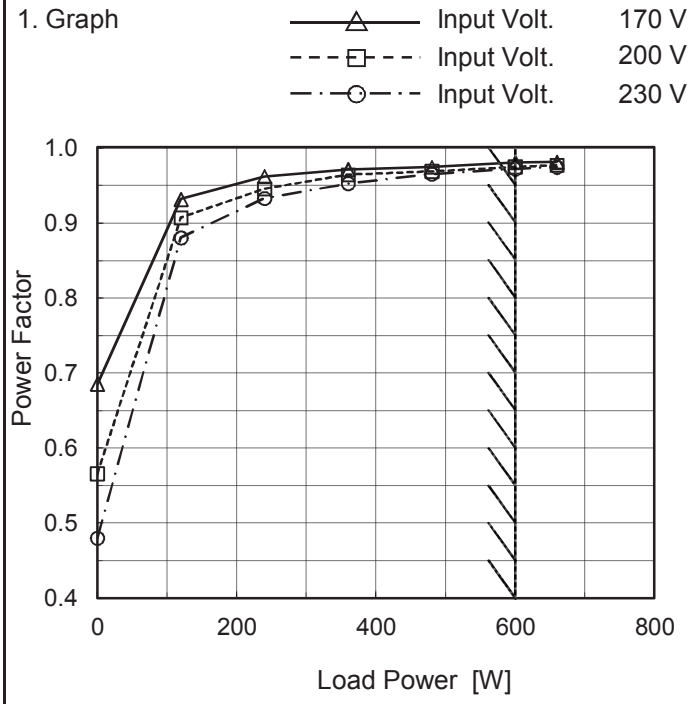

Note:
Hatched line shows the range of the rated load power.

2. Value

Load Power [W]	Power Factor		
	Input Volt. 170[V]	Input Volt. 200[V]	Input Volt. 230[V]
0	0.686	0.566	0.480
120	0.932	0.907	0.881
240	0.962	0.946	0.933
360	0.971	0.964	0.953
480	0.975	0.969	0.966
600	0.981	0.975	0.972
660	0.981	0.977	0.975
--	--	--	--
--	--	--	--
--	--	--	--
--	--	--	--

BC-11328

COSEL

Model	AME600F	
Item	Inrush Current	Temperature 25°C Testing Circuitry Figure A
Object	――――――	

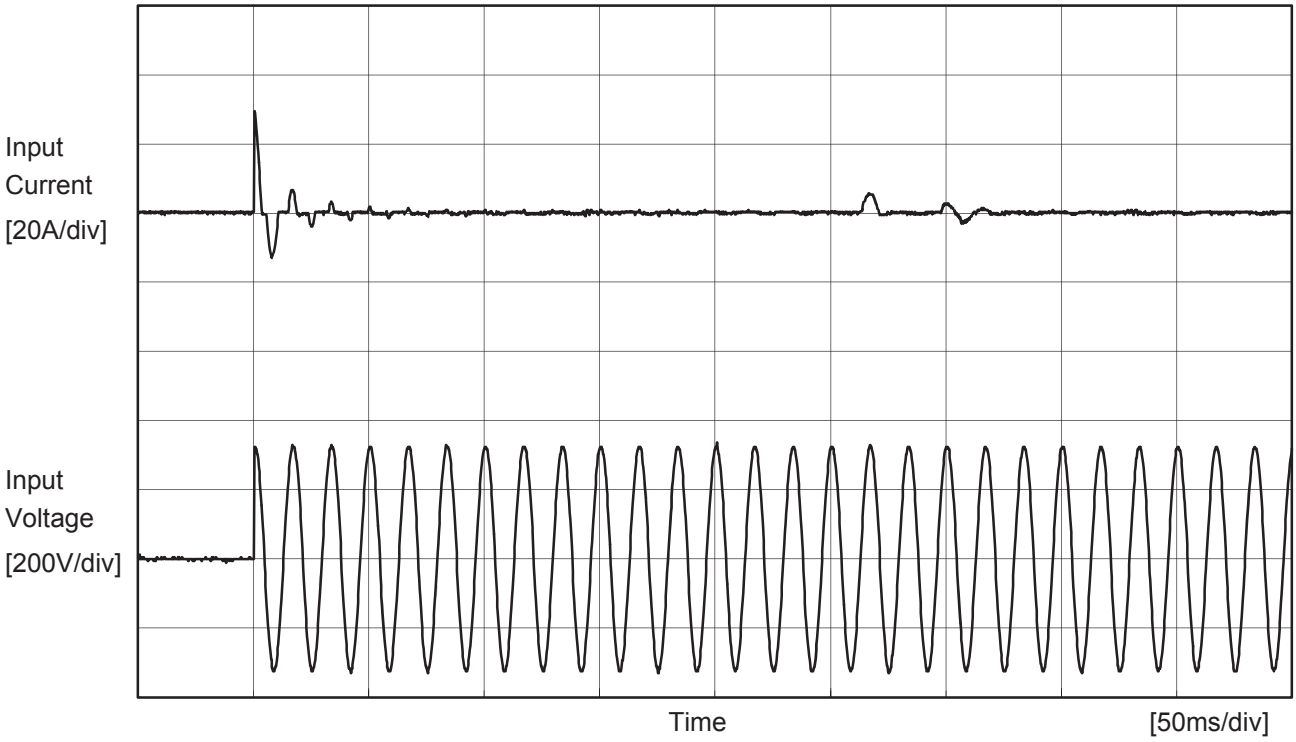

Input Voltage	230 V
Frequency	60 Hz
Load	100 %
Primary inrush current	29.4 A
Secondary inrush current	5.7 A

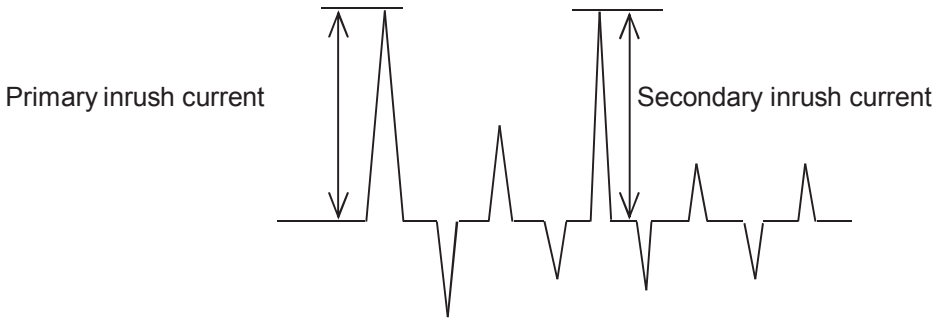

COSEL

Model	AME600F
Item	Leakage Current
Object	――――――――

Temperature 25°C
Testing Circuitry Figure B

[mA]

Standards	Testing Circuitry	Measuring Method	Input Volt.			Note
			170 [V]	200 [V]	230 [V]	
DEN-AN	Figure B-1	Both phases	0.12	0.15	0.17	Operation
		One of phases	0.24	0.27	0.31	Stand by
IEC62368-1	Figure B-2	Both phases	0.13	0.15	0.17	Operation
		One of phases	0.24	0.27	0.31	Stand by
	Figure B-3	Both phases	0.12	0.15	0.17	Operation
		One of phases	0.23	0.27	0.31	Stand by
IEC60601-1	Figure B-4	Both phases	0.12	0.15	0.17	Operation
		One of phases	0.24	0.27	0.31	Stand by

Note:
The value of "One of phases" is for reference only.
The above value is the larger one of each phase of AC input.

COSEL

Model	AME600F	
Item	Rise and Fall Time	Temperature 25°C Testing Circuitry Figure A
Object	――――――	

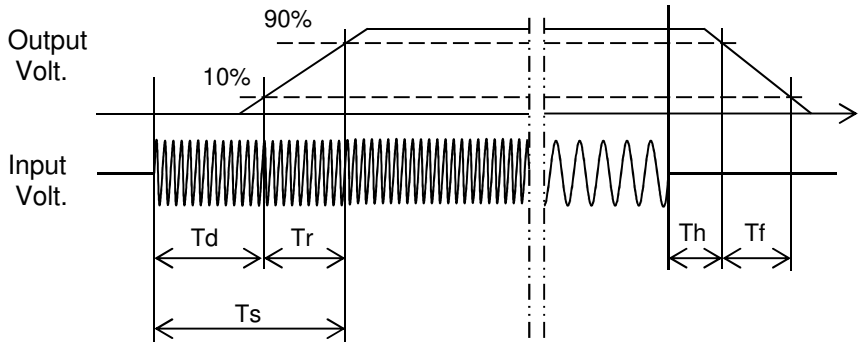

Input Voltage 230V

Load Power 100%

[ms]

Time / MODULE	Td	Tr	Ts	Th	Tf
120W, SINGLE	788	6	794	23	1 - 9
240W, SINGLE	783	5	787	23	0.2 - 5
150W, DUAL	784	3	787	25	0.6

COSEL

Model	AME600F
Item	Hold-up Time
Object	――――――――

Temperature 25°C
Testing Circuitry Figure A

1. Graph

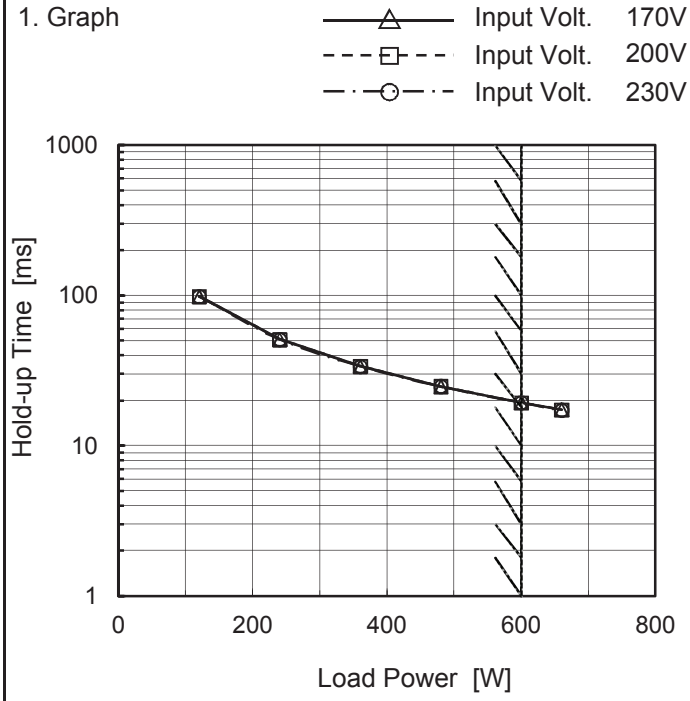

2. Value

Load Power [W]	Hold-up Time [ms]		
	Input Volt. 170[V]	Input Volt. 200[V]	Input Volt. 230[V]
0	--	--	--
120	99	99	99
240	51	51	51
360	34	34	34
480	25	25	25
600	19	19	19
660	17	17	17
--	--	--	--
--	--	--	--
--	--	--	--
--	--	--	--

Note:
Hatched line shows the range of the rated load power.

"Hold-up time" is the amount of time a power supply can maintain output voltage within the range of the output voltage accuracy after a loss of input power.

BC-11328

COSEL

Model	AME600F
Item	Instantaneous Interruption Compensation
Object	――――――――

Temperature 25°C
Testing Circuitry Figure A

1. Graph

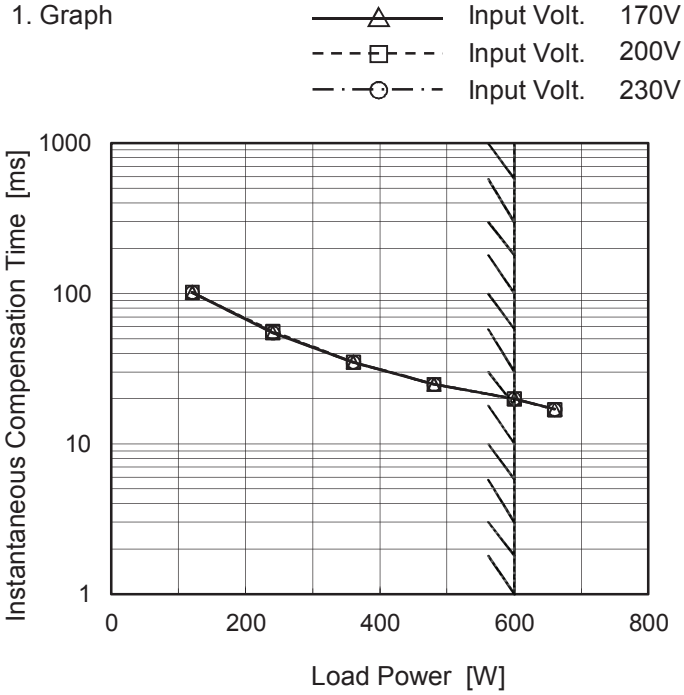

Note:
Hatched line shows the range of the rated load power.

2. Value

Load Power [W]	Time [ms]		
	Input Volt. 170[V]	Input Volt. 200[V]	Input Volt. 230[V]
0	--	--	--
120	102	102	102
240	55	56	55
360	35	35	35
480	25	25	25
600	20	20	20
660	17	17	17
--	--	--	--
--	--	--	--
--	--	--	--
--	--	--	--

BC-11328

COSEL

Model	AME600F
Item	Minimum Input Voltage for Regulated Output Voltage
Object	――――――――

Testing Circuitry Figure A

1. Graph

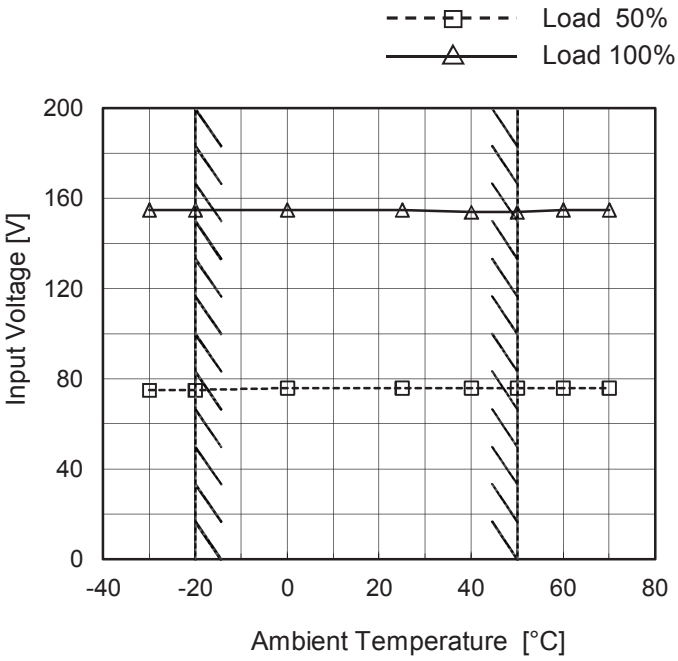

Note:
Hatched line shows the range of the rated operating temperature.

2. Value

Ambient Temperature [°C]	Input Voltage [V]	
	Load 50%	Load 100%
-30	75	155
-20	75	155
0	76	155
25	76	155
40	76	154
50	76	154
60	76	155
70	76	155
--	--	--
--	--	--
--	--	--

COSEL

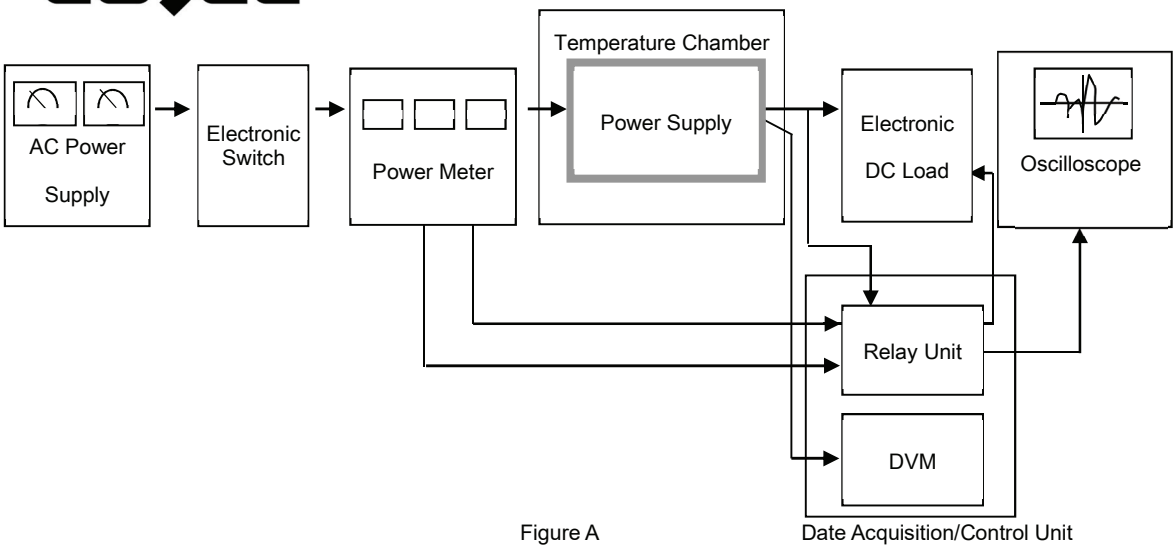

Figure A

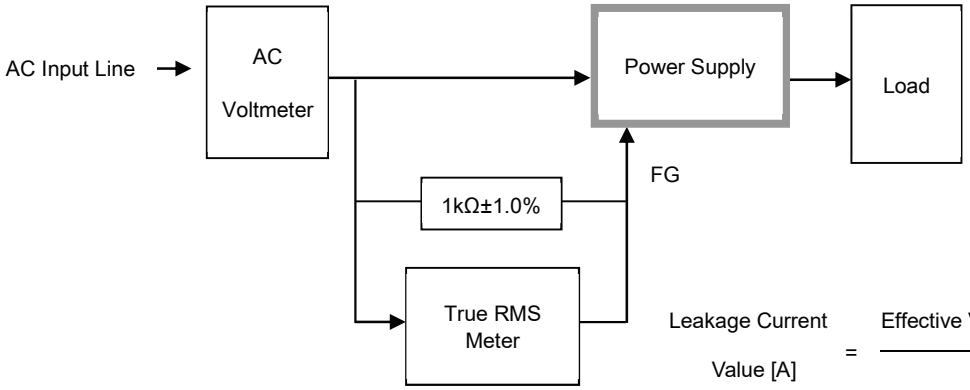

$$\text{Leakage Current Value [A]} = \frac{\text{Effective Value of True RMS Meter [V]}}{\text{1k [Ω]}}$$

Figure B-1 (DEN-AN)

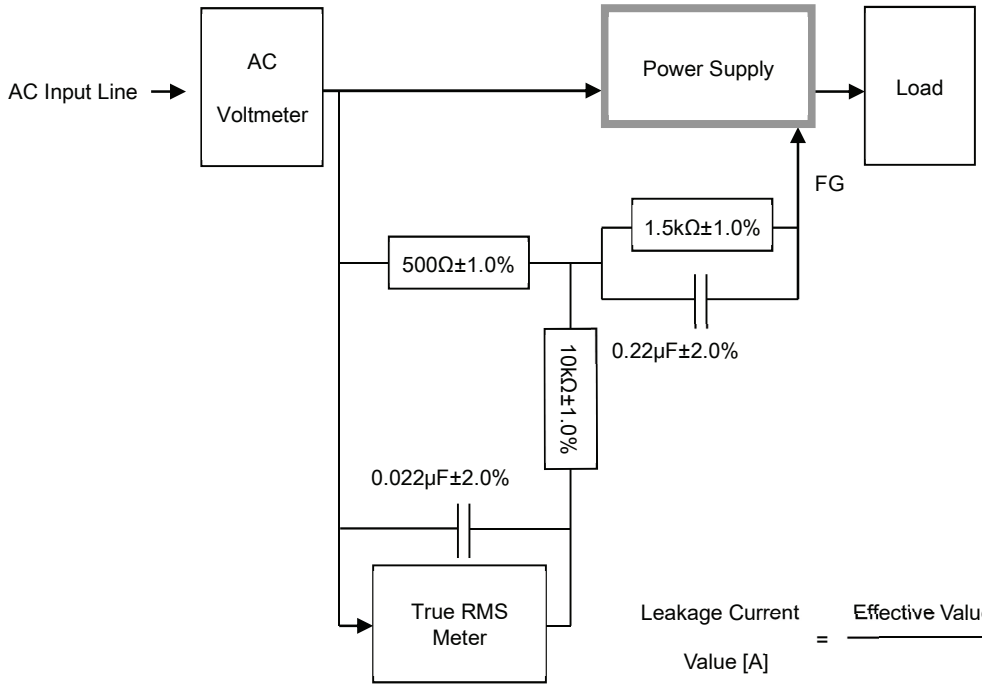

$$\text{Leakage Current Value [A]} = \frac{\text{Effective Value of True RMS Meter [V]}}{\text{500 [Ω]}}$$

Figure B-2 (IEC62368-1 refer to IEC60990 Fig.4)

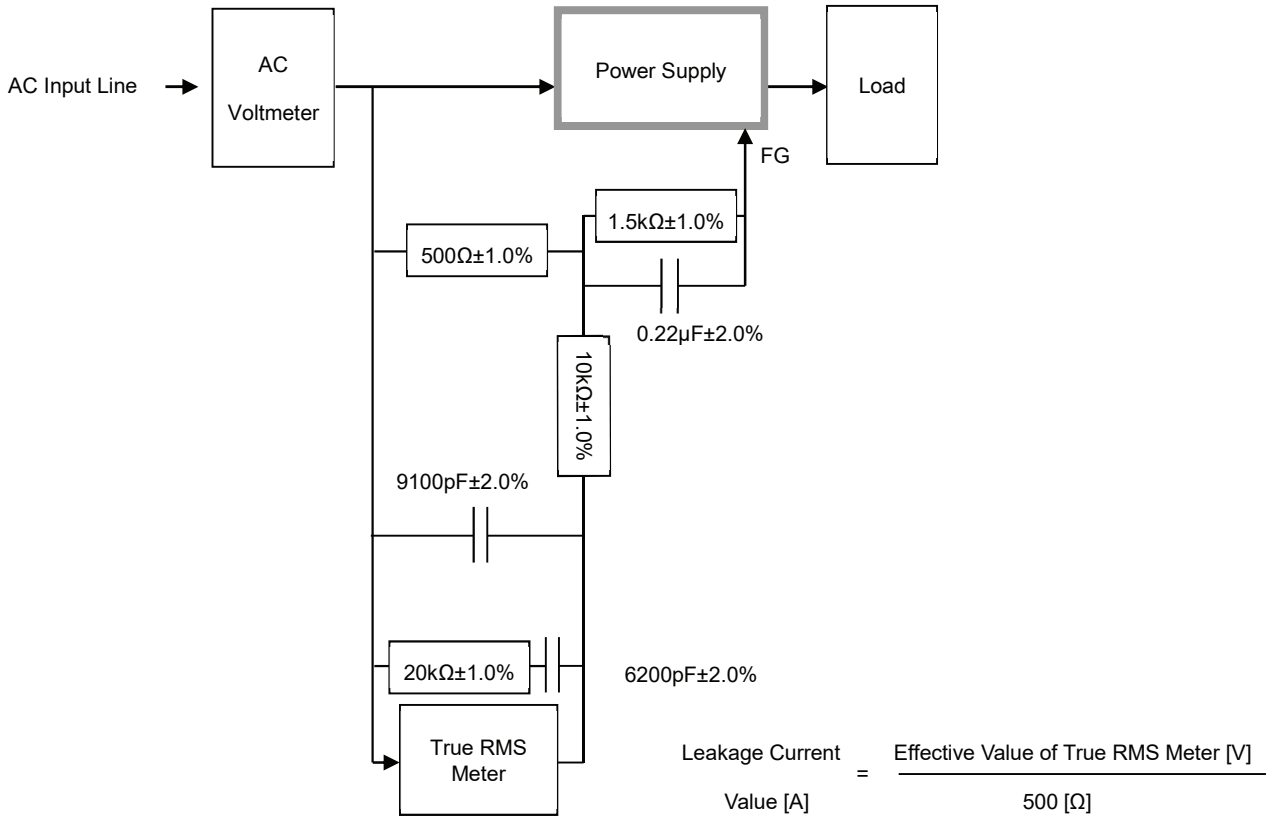

Figure B-3 (IEC62368-1 refer to IEC60990 Fig.5)

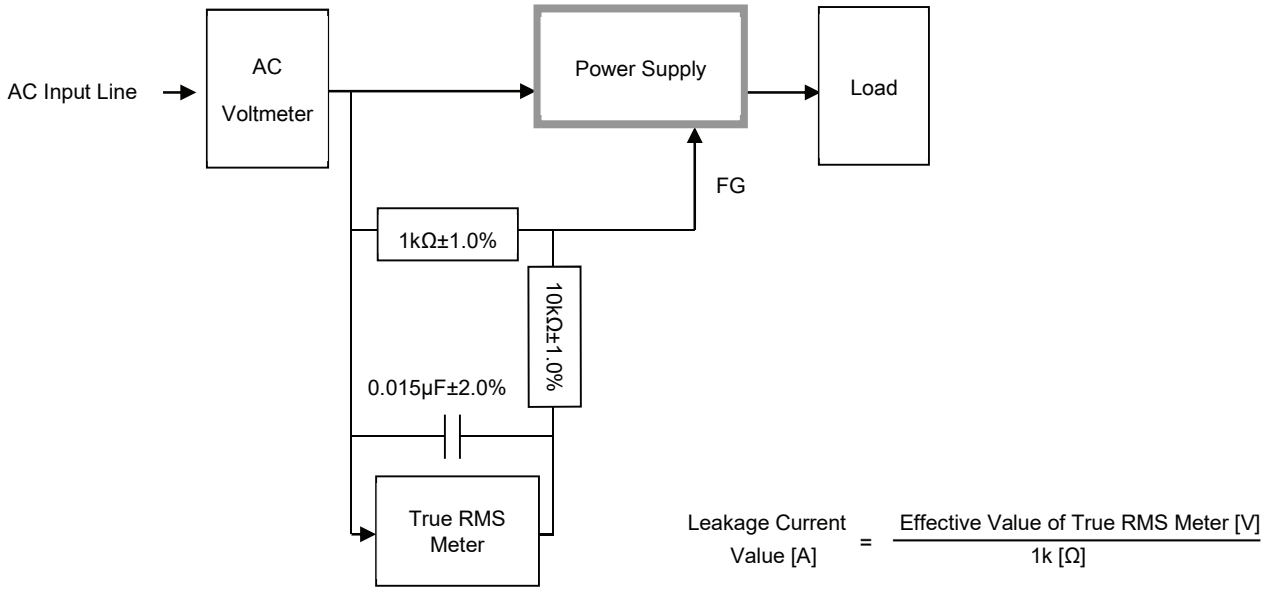

Figure B-4 (IEC60601-1)